Introduction

Thank you very much for purchasing our product.
Please read this operating manual before using this product, and be sure to use it properly.
After reading this operating manual, be sure to keep it in a place that you can access at any time.

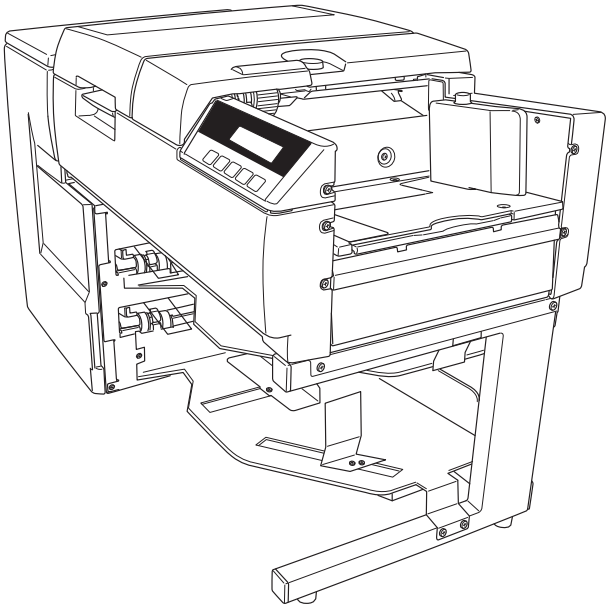

This equipment has been tested and found to comply with the limits for a Class B digital device, pursuant to Part 15 of the FCC Rules. These limits are designed to provide reasonable protection against harmful interference in a residential installation. This equipment generates, uses and can radiate radio frequency energy and, if not installed and used in accordance with the instructions, may cause harmful interference to radio communications. However, there is no guarantee that interference will not occur in a particular installation. If this equipment does cause harmful interference to radio or television reception, which can be determined by turning the equipment off and on, the user is encouraged to try to correct the interference by one or more of the following measures:

- Reorient or relocate the receiving antenna.
- Increase the separation between the equipment and receiver.
- Connect the equipment into an outlet on a circuit different from that to which the receiver is connected.
- Consult the dealer or an experienced radio/TV technician for help.

Table of contents

Safety precautions 4

Before using 7

Power cord list for Europe 8

Warranty 9

Precautions for use 10
- Stacker unit precautions for use 12

Names of parts 13
- Operating panel functions and operating instructions 14

Operation
- Preparation 15
- Connecting to a computer 16
- Turning power on 20
- Loading paper 21
- Setting paper weight 24
- Stacker unit (printer) preparation 25
- Printer unit precautions for use 29
- Using the paper ejection guide unit 30

Marking instructions 31

Data reading settings
- Setting column 32
- Setting reading method 33
- Setting reading side 35
- Setting paper weight 36
- Setting the sheet size(Sheet Size) 37

Error detection settings 38

Buzzer settings
- Buzzer control 39
- Buzzer sound adjustment 40

Printer settings
- Printer control 41
- Character size setting 42

Low power consumption settings
- Sleep duration 45
- Stanby duration 46

Barcode setting
- Barcode control 47

Displaying various information
■ Displaying the version 48
■ Displaying front side reading sensor settings 49
■ Displaying back side reading sensor settings 50
■ Displaying optional unit settings 51
■ Displaying total count 52
■ Displaying serial number 53

Operating tests
■ Feed test 1 54
■ Feed test 2 55
■ Printer test 56
■ Printer inkjet test 57

Clearing paper jams 58

Back side reading unit 59

Barcode unit/ V • Barcode unit/ H 60

Cleaning
■ Cleaning procedures 66
■ Cleaning point 67

Service schedule 71

Product specifications 73

Barcode unit specification 75

External diagram 78

List of menu modes 79

Error displays and countermeasures
1. Errors 81
2. Warnings 84

OMR glossary 87

Appendix ■ Sheet creation reference

Safety Precautions

These “Safety Precautions” pages list various symbols for ensuring safe operation of this product so as to prevent users or other people from being injured, or property from being damaged.
Read these precautions thoroughly and understand the meanings of the symbols before proceeding to the main text of this manual.

Warning

Improper operation by neglecting these instructions may result in death or serious injury.

Caution

Improper operation by neglecting these instructions may result in personal injury or property damage.

	Neglecting these instructions may generate smoke or fire.
	Neglecting these instructions may cause electric shock.
	Indicates a prohibited action.
	Indicates that disassembly or modification is prohibited.
	Indicates that the power plug must be removed from the outlet for safe operation.
	Instructs that do not spray the materials containing an inflammble gas or liquid to the device.

⚠ Warning

● Fire or electric shock may result if this product continues to be used when there is a strange smell or sound.
In such a case, immediately turn the power switch off and then remove the power plug from the outlet. After making sure that it is no longer smoking, ask the dealer for repair service.
Never attempt to repair by yourself since that may be very dangerous.

● Do not modify or disassemble this device. That could cause fire or electric shock.
● Do not remove the cover from this device. That could cause electric shock. Ask the dealer to conduct any internal checking, adjustment or repair.
Pay thorough attention to the above instructions. Otherwise, fire or electric shock may occur.

● Power plug precautions
- Do not pull on the cord when removing the power plug from the outlet.
- Do not use any power plug other than the specified one.
  Make sure to use the adapter included in the package.

● Device precautions
- Do not use it with a supply voltage other than the specified one.
- Do not install it in a place that may be wet with water or oil, steam, moisture or dust.
- Do not insert or drop any metal, foreign combustible matter, etc., into the port.
- Do not place containers with chemicals or water, or small metal pieces near the device.

● Do not cover the vent hole. That could cause heat retention, resulting in fire.

● If the device is dropped or the cover is broken, immediately turn the power switch off and remove the power plug from the outlet. Then, contact the dealer.

● If any foreign matter should enter inside, immediately turn the power switch off and remove the power plug from the outlet. Then, contact the dealer or Sekonic. If the device continues to be used with foreign matter inside, fire or electric shock may occur.
If water or other substances penetrate the unit, immediately turn the power switch off and remove the power plug from the outlet. Then, contact the dealer or Sekonic. If the device continues to be used with water or other foreign matter inside, fire or electric shock may occur.

● Do not spray any materials containing an inflammable gas or liquid on the device and be sure to keep this kind of materials away from this device.
Use a cleaning cloth with suitable amount of cleaning liquid to wipe off well, after removing the power plug from the outlet and the device becomes to cool off.

Caution

- **Do not place the device in an unstable location. Otherwise, it may fall or collapse, resulting in injury.**

- **When or closing the upper part of the main body, do not place your hand on the paper-feeding surface. Otherwise, fingers may be caught, resulting in injury.**
- **If you must touch the paper-feeding surface of the main body, be careful not to allow your fingers to be caught or hit.**

- **When doing maintenance on the device, for your own safety, be sure to remove the power plug from the outlet.**
- **When the device is not in use for long periods, for safety, remove the power plug from the outlet.**

- **Before moving the device, be sure to remove the power plug from the outlet. If the cable is damaged, fire or electric shock may occur.**

- **Do not connect or disconnect the power plug if your hands are wet. Otherwise, an electric shock may occur.**

- **Do not put heavy things on the device. Otherwise, it may fall or collapse, resulting in injury.**

Before using

Before using the device, check if all of the following items are included in the package. If components are missing or damaged, contact the dealer where you purchased the device.

1. Main body unit

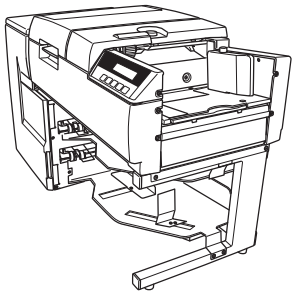

2. Main tray

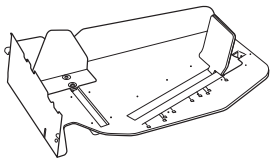

3. Selection tray

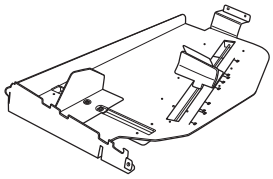

4. Power cord for USA

Note) Refer to the next page for Power cord for Europe.

5. Operating manual (this booklet)

6. A4 check sheets (5 sheets)
A4 mark sheets (5 sheets)

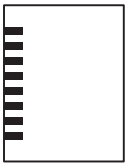

Mark entry sheet:
use it as an example when designing mark sheet.

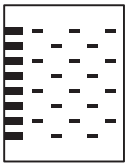

Check sheet:
use it for checking OMR operations.

7. USB cable

8. Ink cartridge

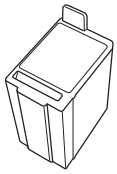

9. Storage bag
(Transparent plastic bag)

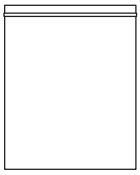

Power cord list for Europe

As stated on page 7 of this manual, the machine includes a representative variety of power adapters. If none of the included adapters match the power outlets in your location, please find and use an appropriate adapter.

A type
(American Type)

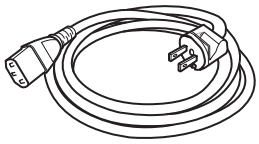

BF type
(British Type)

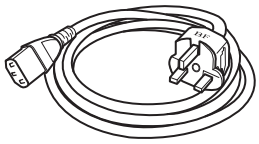

C type
(CEE Type)

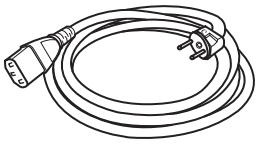

B type
(British Type)

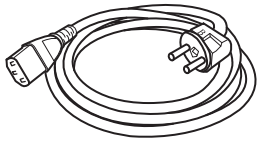

B3 type
(British Type)

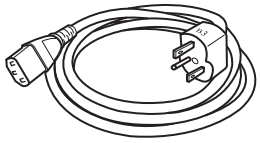

SE type
(CEE Type)

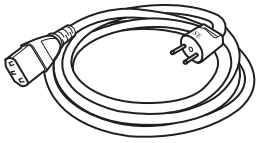

O type
(Ocean Type)

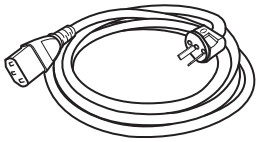

Before using Power cord list for Europe

Country	Plug type
U.K.	B, B3, BF, C
Italy	A, C, SE
Austria	B3, BF, C, O, SE
Netherlands	B, C, SE
Greece	B, B3, C, SE
Sweden	B, C, SE
Spain	A, C, SE
Denmark	C
Germany	A, C, SE
Finland	A, B, C, SE
France	A, C, O, SE
Belgium	A, B, C, SE
Portugal	B, B3, BF, C, SE
Luxemburg	A, C, SE
Ireland	A, B, B3, BF, C, SE
Turkey	A

Warranty

The cost-free warranty period for this product extends for one year after delivery.
The company will repair malfunctions arising during this period free of charge if they are determined to be the company's responsibility. In the event repairs are necessary, as a general rule the company will keep the product temporarily to carry out such repair work.

Malfunctions and other failures caused by customer misuse or by wastage of the parts due to mass processing will not be covered by the warranty.

This warranty covers only this product and its accessories, and the company will not assume any responsibility for monetary damage, lost earnings, or any third-party claims as a result of using this equipment.

Precautions For Use

Handle the device with the following points in mind to enable full use of its functions.

- **Precautions regarding installation**

  Do not place the device in the following places. Otherwise, failures could result such as paper jams, reading errors, or the unit could become inoperative.

  (1) In direct sunlight or near a heating device.

  (2) Outdoors where the main body may not perform satisfactorily due to rain or strong wind.

  (3) A place where the main body may not perform satisfactorily such as it is subject to vibration while operating, or it is placed in an unstable location.

  (4) Places subject to sudden temperature changes, excessive moisture and dust.
  Recommended temperature: 10-30°C
  Guaranteed operating temperature range: 5-35°C
  Humidity: 30-80% (no condensation)
  Avoid environments outside the above ranges as much as possible when placing the device.

- **Handling precautions**

  (1) Do not connect or disconnect the power cord or connector when the device is operating or the power switch is on.

  (2) Do not move the device while it is operating. Also, do not touch, pull, or push paper.

  (3) Please do not put any substances and one's hand on the upper cover.
  It will be occurred paper jamming or reading error

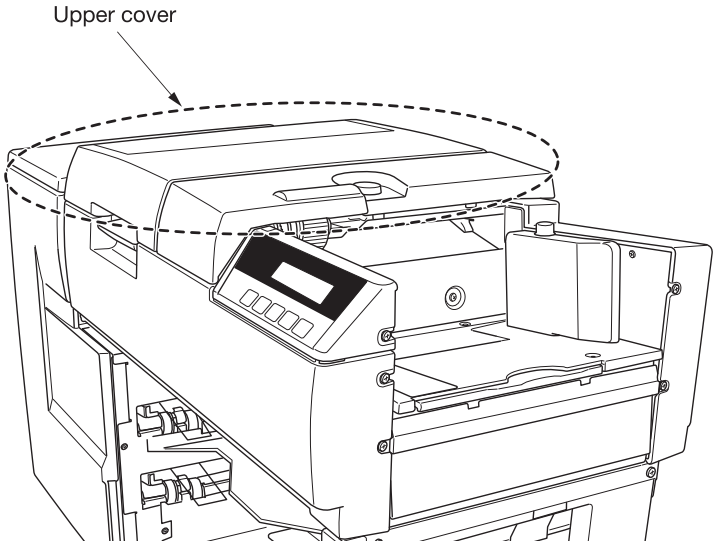

(4) This device is designed to deferred type.Do not give it a strong vibration and shock etc.
(5) Allow an interval of at least 5 seconds between turning the power switch on and off.
(6) Do not insert objects other than paper sheets (such as paper clips, staples, etc.).
(7) Do not apply force that deforms paper while it is being loaded.
(8) Since the paper reading part is equipped with an optical lens, never insert a screwdriver or other such objects. (Otherwise, reading may be disabled.) If paper feeding is disabled due to dust or the like in the paper feeder, open the top cover to remove it. (See "Cleaning" P.64)
(9) If the roller becomes soiled with powder from paper or pencil lead, the roller and the paper may slip. In order to prevent slippage, clean the roller at proper intervals. (See "Cleaning" P.64)
(10) If the exterior of the device is soiled, lightly wipe with a soft cloth wetted with water or a neutral detergent. Note that wiping with a cloth wetted with volatile chemicals like benzene or paint thinner may cause deformation or discoloring.
(11) ⚠ Do not apply strong loads to the tray, as it may bend or break.
(12) ⚠ Make sure to observe the following points when you handle the device and USB cables. Otherwise, mechanical failure or damage may be caused.
* Do not forcibly pull or bend the USB cable.
* Always hold the plug when you insert or pull out the USB cable. Never apply excessive force to the cable.
* When installing/moving the device or a PC, do not apply excessive power to the cord or plug of the USB cable.

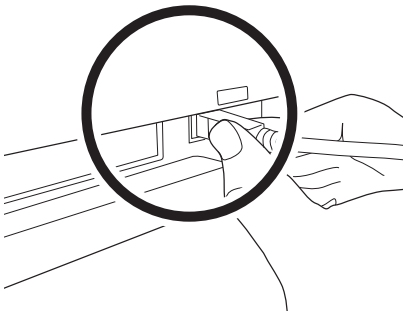

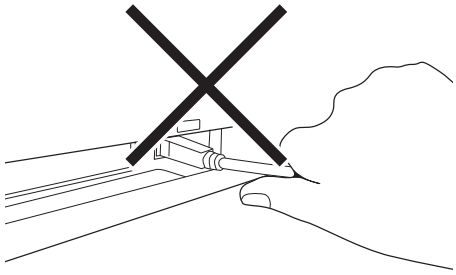

■ Stacker unit precautions for use

(1) Make sure to tightly close the jam release levers and the front door. Loose levers or a loose door may trigger paper jams.
(2) Use ink cartridges before their expiry dates.

Names of parts

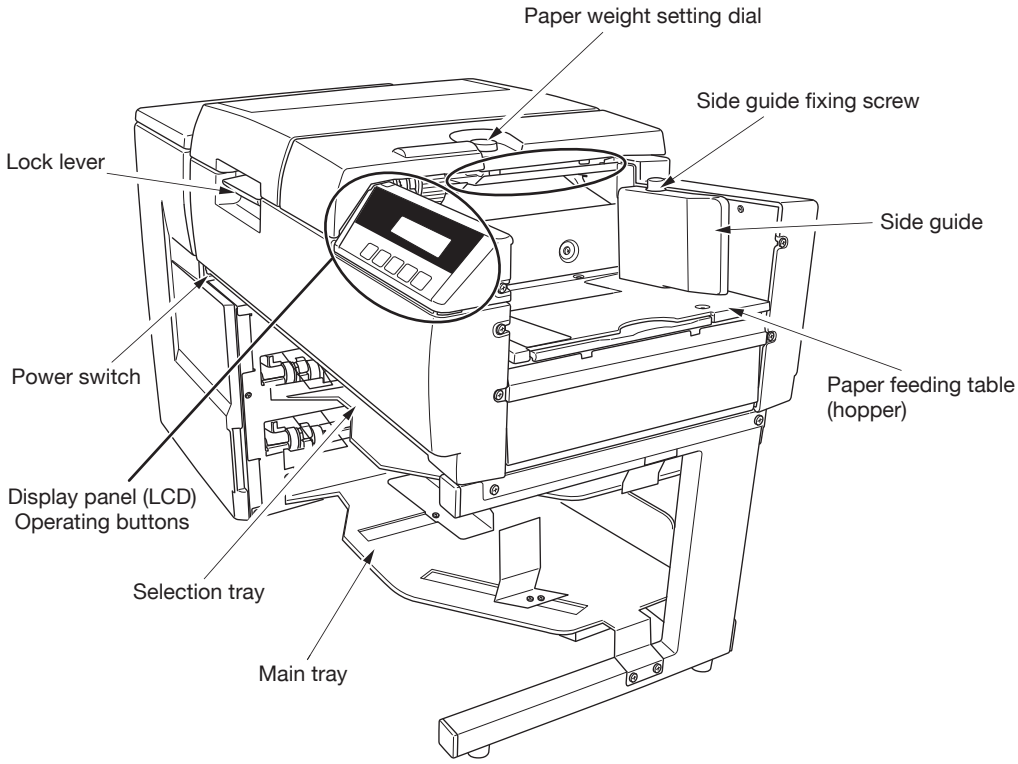

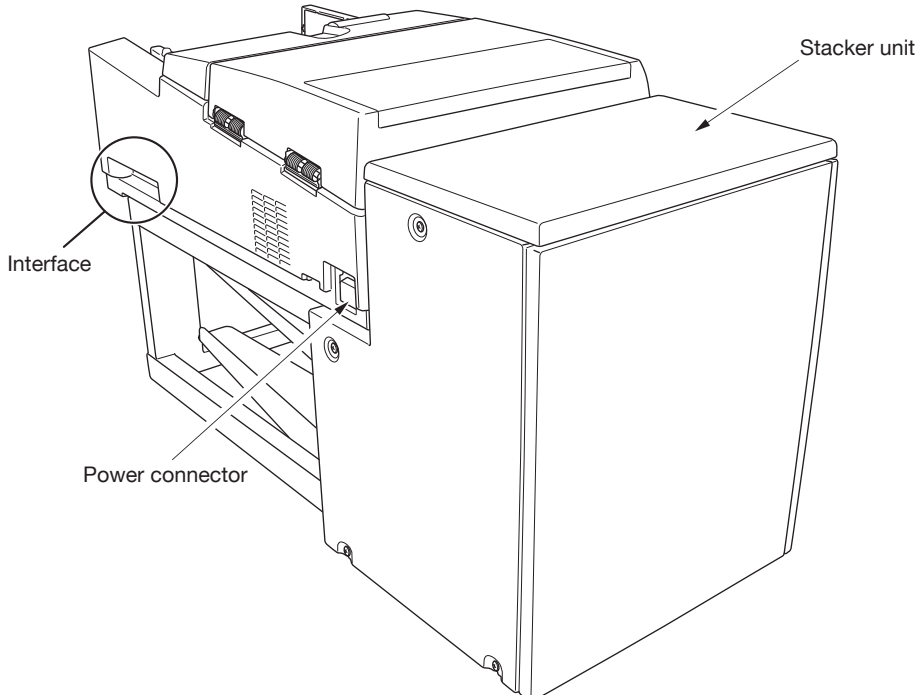

■ Operating panel functions and operating instructions

The operating panel has five kinds of switches.
The switches don't work while the machine is performing a function.

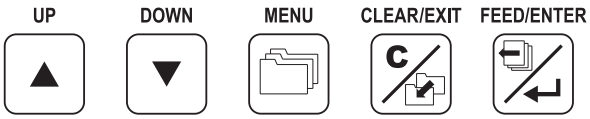

There are two modes: normal mode and menu mode.
In normal mode, the machine is connected to a computer and is controlled by commands from the host.
In menu mode, various settings are controlled by using panel switches.

1. 

switch

(1) Normal mode: Raises the paper-feeding table.
(2) Menu mode: Use it to choose menu items and to select parameters. When you push for a long time, while having pushed, it keeps increasing menu items and parameters.

2. 

switch

(1) Normal mode: Drops the paper-feeding table.
(2) Menu mode: Use it to choose menu items and to select parameters. When you push for a long time, while having pushed, it keeps increasing menu items and parameters.

3. 

switch

(1) Normal mode: Enters menu mode.
(2) Menu mode: Returns to normal mode.

4. 

switch

(1) Normal mode: If an error is displayed, you can clear the error. Clears the feed count.
(2) Menu mode: If an error is displayed, you can clear the error. Moves one level higher in the hierarchy from the current level.

5. 

switch

(1) Normal mode: Feeds one sheet. If you keep the switch depressed, paper is fed as long as the switch is depressed.
(2) Menu mode: Executes the selected menu item.

Operation

■ Preparation

1. Connect the power cord to the main device.

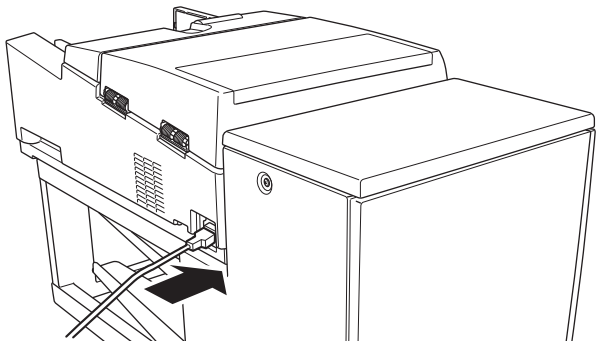

∗ When using the printer, operate P26 “ Stacker unit (printer) preparation ”

2. Connect the power cord to the power outlet.

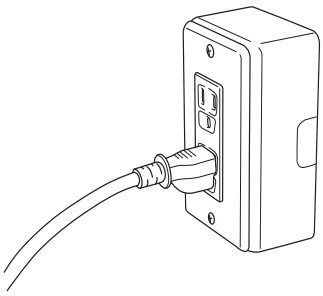

■ Connecting to a Computer

(If newly implementing OMR for the first time)
The device is equipped with a USB port that serves as an interface for connecting to a computer.
An application software program must be installed to enable it to control the device and collect data for the computer. Purchase the MarkView application software program sold separately and download it to the relevant computer.

The USB device driver will need to be installed before connecting device to the computer.
To install the driver, use the USB device driver installer program “DriverInstaller*.*.exe” that comes with the application software program.

1. Installing the USB device driver

Start the USB device driver installer, and follow the instructions displayed to install the driver.

The “*.*” in the installer file name represents the version number of the driver.

2. Connecting with a USB cable

After installing the USB device driver, use the included USB cable to connect the device and computer together.

3. Switching the operating mode

Refer to see the "Turning power ON " section for instructions on how to turn the power ON to the OMR device.

Set the operating mode to SR-11000 mode.

(1) Press the MENU switch to activate Menu mode.

(2) Press the UP ▲ and DOWN ▼ switches to select the following mode:

```
Operation Mode
        =SR-11000 Mode
```

Use the FEED/ENTER switch to start processing the [Operating mode] settings.

(A flashing [*] will display in the first line and first column of the LCD at this time.)

(3) Use the UP ▲ and DOWN ▼ switches to select SR-11000 mode.

```
Operation Mode
        =SR-11000 Mode
```

Operation mode setting values
- SR-11000 mode
- SR-6500 mode

Press the FEED/ENTER switch to store the selected mode to memory.

(The flashing [*] marks on the LCD will then go out.)

(4) Press and hold down the CLEAR/EXIT switch until the system returns to Normal mode or press the MENU switch to switch back to Normal mode.

(If replacing a Sekonic OMR SR-6500 device with SR–11000)

If already using Sekonic OMR SR-6500 device connected by USB 2.0 and replacing it with SR–11000, switching the operating mode to SR-6500 mode will enable SR–11000 to be used as SR-6500.

*It cannot be operated when USB 1.1 is used for connection to a computer.

1. Switching the operating mode

Refer to see the "Turning power ON " section for instructions on how to turn the power ON to the OMR device.

Set the operating mode to SR-6500 mode.

(1) Press the MENU switch to activate Menu mode.

(2) Press the UP ▲ and DOWN ▼ switches to select the following mode:

```
Operation Mode
      =SR-11000 Mode
```

Use the FEED/ENTER switch to start processing the [Operating mode] settings.

(A flashing [*] will display in the first line and first column of the LCD at this time.)

(3) Use the UP ▲ and DOWN ▼ switches to select SR-6500 mode.

```
Operation Mode
      = SR-6500 Mode
```

Operation mode setting values
- SR-11000 mode
- SR-6500 mode

Press the FEED/ENTER switch to store the selected mode to memory.

(The flashing [*] marks on the LCD will then go out.)

(4) Press and hold down the CLEAR/EXIT switch until the system returns to Normal mode or press the MENU switch to switch back to Normal mode.

2. Connecting with a USB cable

Use the included USB cable to connect the device to a computer.

3. Configuring the interface settings

(1) Press the MENU switch to activate Menu mode.

(2) Press the UP ▲ and DOWN ▼ switches to select the following option:

```
Setting of
                Interface
```

Then press the FEED/ENTER switch to proceed.

(3) Press the FEED/ENTER switch to start processing the [Device ID] settings.

(A flashing [*] will display in the first line and first column of the LCD at this time.)

Use the UP ▲ and DOWN ▼ switches to set a given value.

(4) Press the FEED/ENTER switch to store the specified setting value to memory.

(The flashing [*] marks on the LCD will then go out.)

```
* Device ID
                =      0
```

Device ID setting values 0 to 126

(5) Press and hold down the CLEAR/EXIT switch until the system returns to Normal mode or press the MENU switch to switch back to Normal mode.

After installing the USB device driver, attach the device to the computer by USB using the included USB cable.
If you are not able to use the MarkView application software program for whatever reason, you will need to obtain a copy of the software development kit available separately and develop your own software to use.
The software development kit comes with an API reference manual, an API library, and a USB device driver installer. For details on the software development kit, refer to the Sekonic website at the address below.

*No free support will be provided for assistance developing software using the software development kit.

Supported Operating Systems

Windows XP SP3 or later (32-bit)
Windows Vista (32-bit, 64-bit)
Windows 7 (32-bit, 64-bit)
Windows 8 (32-bit, 64-bit)

*Operating systems will no longer be considered compatible once Microsoft Corporation ends official support for that particular operating system.

Operating Environment

Compatible devices: PC-/AT-based machines
CPU: Intel Pentium 4-3 GHz or higher or equivalent (Core 2 Duo 2 GHz or higher recommended)
Interface: USB 2.0

*: Not compatible with USB 1.1.
*: Runs at USB 2.0 (High-speed) when connected to a computer equipped with USB 3.0.

Number of devices that can be connected simultaneously: 1 device

*The included USB interface is not guaranteed to work with all USB-compatible devices.
*The device runs using wow64 on 64-bit Windows operating systems.
*Microsoft and Windows are registered trademarks of Microsoft Corporation.
*Other company and product names used in this manual are trademarks or registered trademarks of their respective companies.
The TM and ® symbols are not used in this manual.

■ Turning power on

1. Turn the power on. The following message appears on the display panel (LCD).

```
Initializing
```

2. OMR is initialized.

3. The motor and other components are activated to check startup conditions.

4. Check if the following message appears on the display panel (LCD).

```
Count :      0
```

5. When error messages may appear between steps **2** and **3**, respond according to P.78(Error displays and countermeasures).

■ Loading paper

1. Load paper with the timing marks on the left side of the hopper. The hopper is set to drop when the power is turned on, but if it's still raised, press the DOWN switch in normal mode to lower the hopper. At this time, align paper carefully. Pay particular attention to the leading edges of the paper because feeding errors may occur unless the paper is properly aligned.

2. Adjust the side guide in order to close a gap between the paper and the side guide then fix it with the side guide knob.Note a large gap because mark reading becomes unstable.To move the side guide, loosen the side guide fixing screw. Then adjust and tighten the side guide fixing screw to secure the side guide in place.

Note)
When the side guide is pushed to seat side too much, there are times when it becomes cause of no feed error.

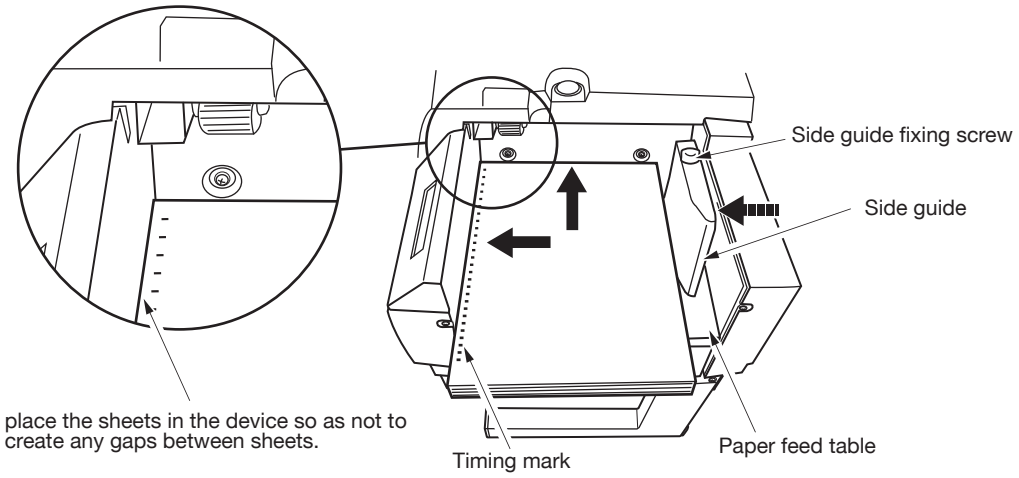

3. Use the index markings on the side guide to determine how many sheets maximum should be placed on the paper feed table. Errors may occur if too many sheets are placed on the table.

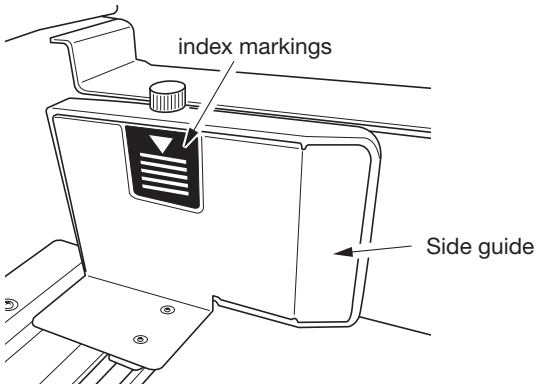

CAUTION)

1) Be extremely careful when handling sheets of paper so as not to bend or tear the paper.
   Errors may occur to use bend or tear OMR sheet.
   Do not attempt to use sheets that are dirty or torn, sheets that have garbage or other contaminants attached to them, or multi-fold sheets (with two or four folds, etc.) that are perforated. If wanting to use paper that is curled, straighten the paper first so that it is flat before putting it in the unit.

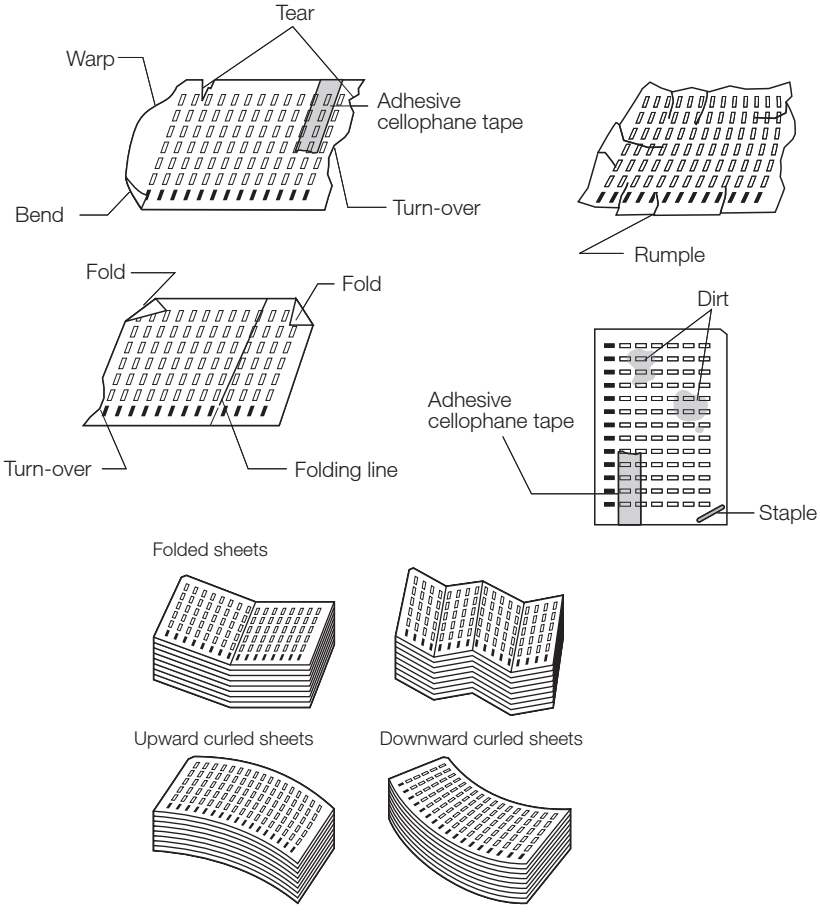

2) To add sheets, lower the paper feed table, place extra sheets on it, and then reset it anew before proceeding.
Double-feeding problems may occur if sheets get stuck together. Make sure to separate sheets of paper as shown at left before placing them on the paper feed table.

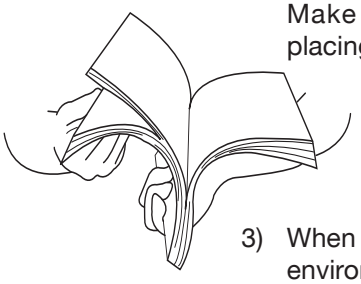

3) When storing paper, avoid keeping it in a place subject to sudden environmental changes. Pay thorough attention to moisture and keep paper in a cabinet or other safe place. Do not leave paper in a dusty place such as near a window.

4. Line up the sheets to the proper paper size indicator markings using the paper eject regulation plate and side paper regulation plate on the main tray and select tray.
Push and hold down the lever on the paper eject regulation plate to move the plate.
If using paper of an irregular size, place the paper eject regulation plate about 5 mm from the front edge of the paper and the side paper regulation plate at a distance equal to the sheet width plus around 17 mm from the reference edge.

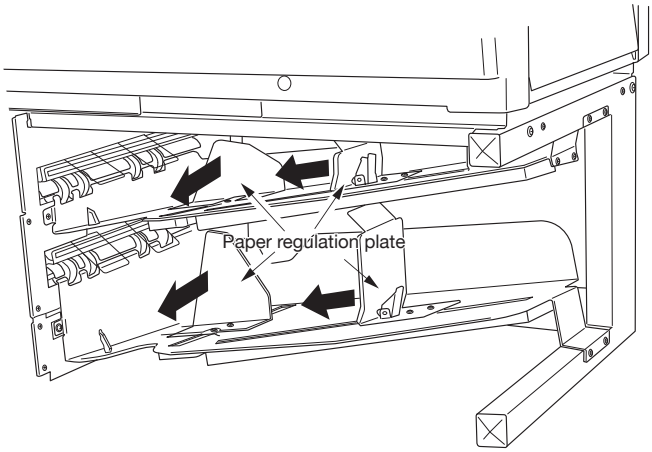

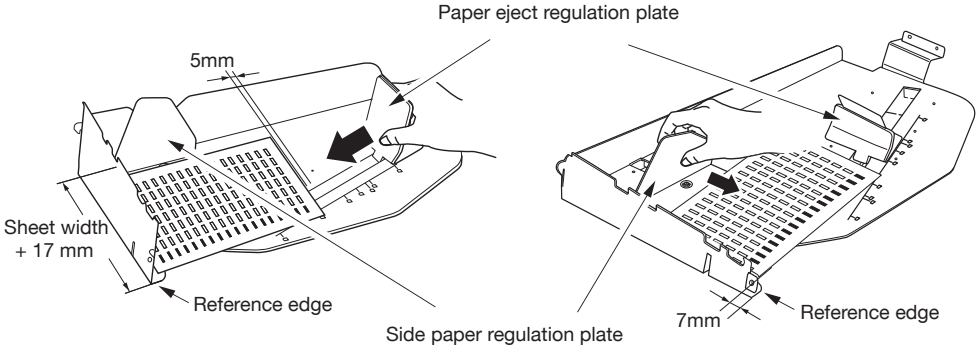

Main tray Selection tray

■ Setting paper weight

1. The device is equipped with a function to detect double-feeding (DF) errors. Conduct [Paper Weight]*1 according to the thickness of the paper to be used.

*1 Setting reading (initially set to a paper weight of 105g/m^2.)

See **"Data reading settings ■ setting paper weight" in this manual. P.35**

Set the paper weight dial to prevent double feeding.
Paper weight value is for reference only, so adjust it according to the condition of the paper to be used.

2. There is a mechanism which adjusts paper interval with the paper weight dial to prevent double feeding. Adjusts the paper weight dial to the sheet which you use.

Note)

1. Because as for thickness of the sheet there is a variation depending upon papery quality, increase and decrease with conveying circumstance.
2. When this dial sets extremely small(narrow),there are case which it becomes cause of the paper clogging and the sheet skew.
3. If tears appear at the end of the paper on the back side, move the setting for the ream weight dial up to around the second mark. This should help resolve the tear problems.

*2 Setting paper weight dial (initially set to a paper weight of 105g/m^2.)

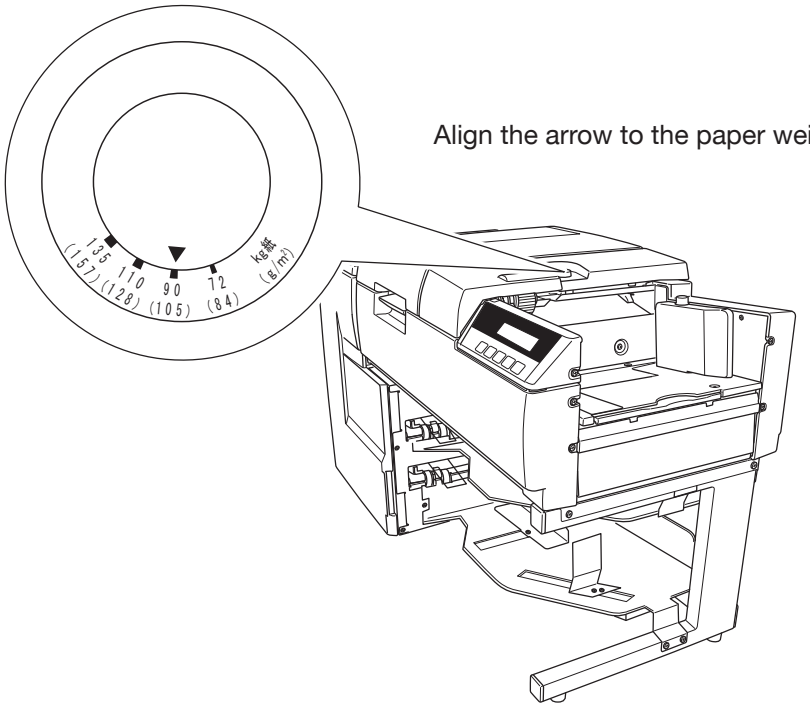

Align the arrow to the paper weight.

■ Stacker unit (printer) preparation

1. Turn the power off and remove the power cord from the outlet.

2. Open the front door of the stacker unit.

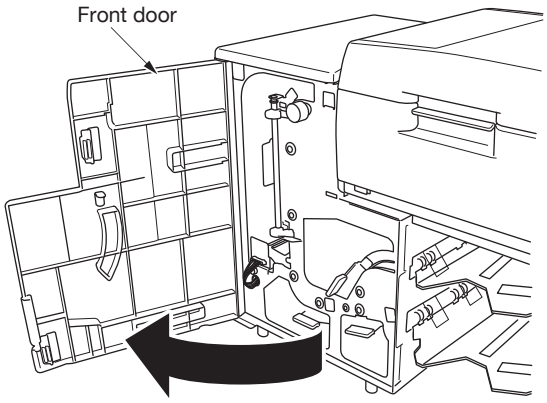

3. Disconnect the printer connector.

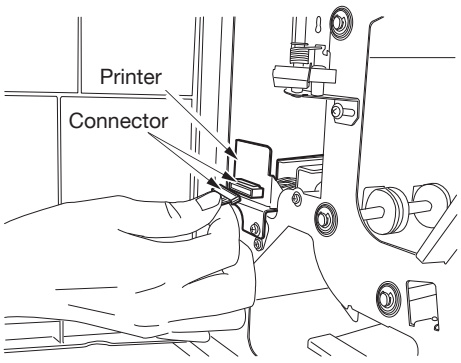

4. Remove the printer fixing screw to remove it.

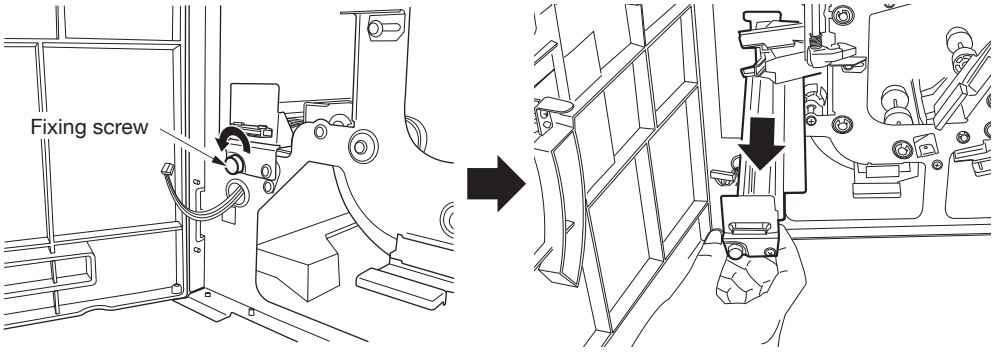

5. Lift the cartridge case lever and insert an ink cartridge.

Note)
Align positioning pins (2 places) of the ink cartridge with the positioning holes (2 places) of the cartridge case.

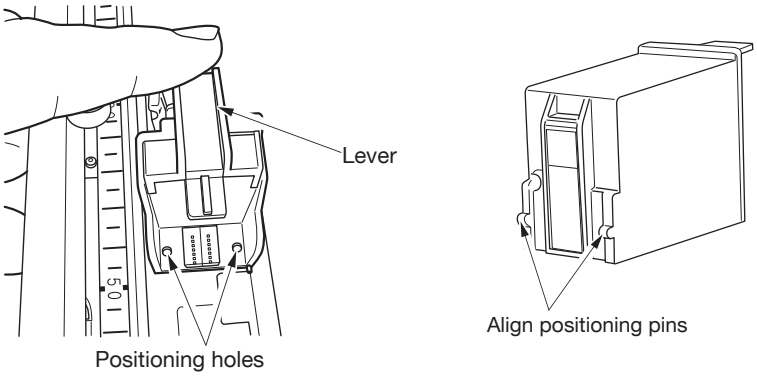

6. Lower the cartridge case lever to lock the ink cartridge.

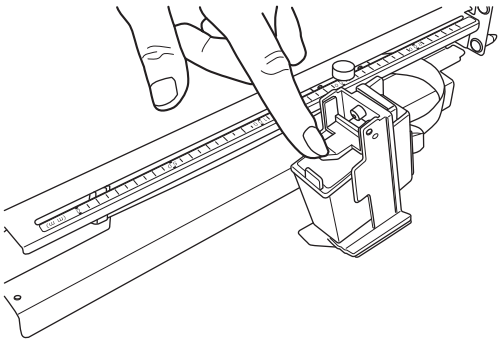

7. Loosen the cartridge case fixing screw, move the cartridge case according to the desired printing position, and tighten the screw to secure it.
* The scale on the positioning sticker indicates the printing position from the edge of the paper. The printing position is determined by aligning the cartridge case fixing screw with the scale on the sticker.

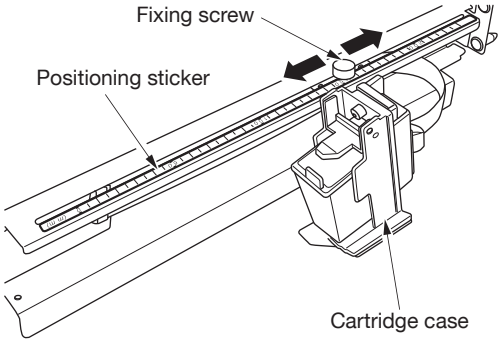

8. If the printing position is properly aligned, install the printer in the stacker unit.

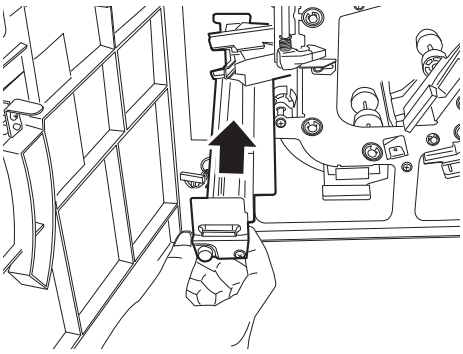

9. Tighten the printer fixing screw and connect the printer connector.

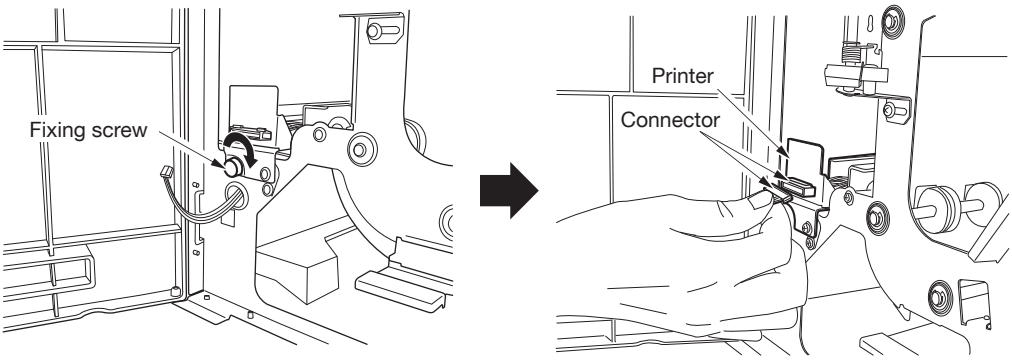

10. Close the front door of the stacker unit.

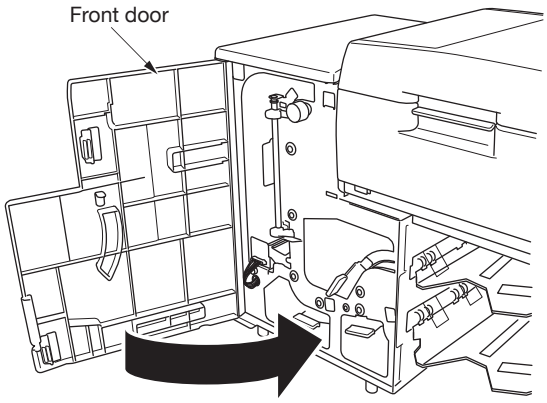

11. Connect the power cord and turn the power on.

12. Enable printer control. (See P.40 for details on printer control.)

13. Execute printer test (See P.55).

* If the printing position is misaligned, adjust it.

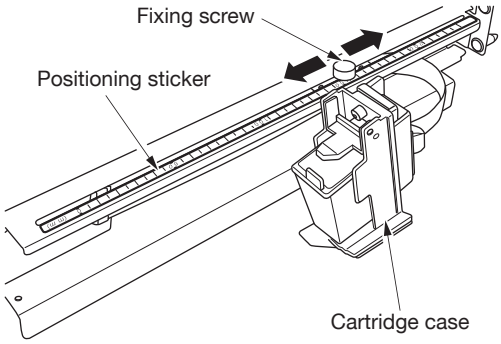

■ Printer unit precautions for use

(1) Under the following conditions, remove the ink cartridge from the device, and store it at room temperature (10-35°C) in the ink cartridge storage bag included in the package.
- If the main device is stored in an environment outside operating condition parameters.
- If the printer will not be used for a long time (about 1 week or more).

(2) Under the following conditions, defective printing (cannot print, streaked printing) may occur.
- Ink cartridge is stored in environments outside of operating conditions.
- The printer unit is left installed in the main device and is not used for a long time (about 1 week or more).

If you have printing problems, you can try to fix them by conducting a printer jet test.
If the problem doesn't improve, the ink head may be dirty.
Remove the ink cartridge and clean the ink head.

Cleaning method:
Wet a napless (low nap) cloth, tissue paper, or other similar item (tissue hereinafter) with water.
Apply the wet tissue to the ink head for several seconds.
Gently wipe the ink head.
If there is any ink left on the ink head, gently wipe it off with a dry tissue.

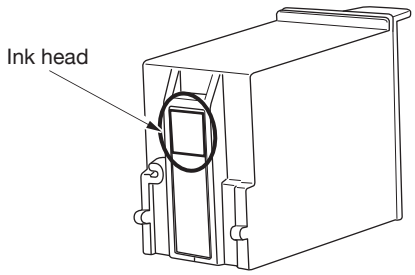

(3) This device consumes the ink little by little even when it does not print. Because it conducts extra injection automatically to prevent clogging up of ink cartridge. If you do not use the printer function,set printer control the invalid and then remove the ink cartridge and keep. And cutting down on consuming the ink becomes possible.

(4) When you do not use the printer, move the case of cartridge to almost central position of the width of the sheet you use. It may reduce jam.

■ Using the paper ejection guide unit

(1) When using the device to read optical mark cards
Flip up the paper ejection guide plate on the paper ejection guide unit to use.

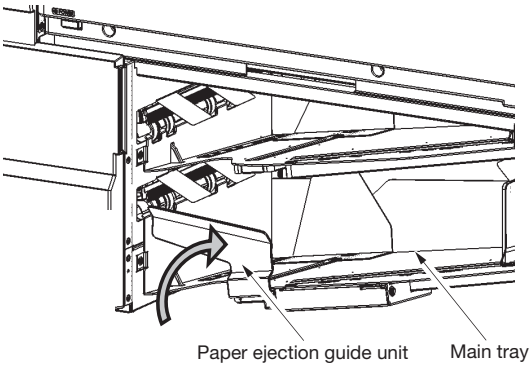

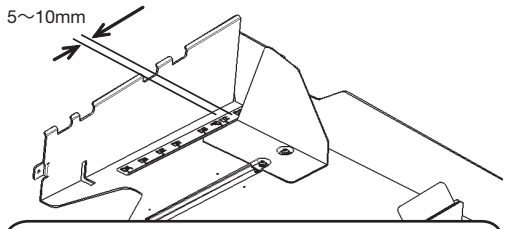

[CAUTION]
When using the paper ejection guide unit, position the side paper regulation plate on the main tray 5 mm to 10 mm further over along the scale.

(2) When removing optical mark cards that have been ejected by the device
Flip the paper ejection guide plate on the paper ejection guide unit forward toward you before removing the optical mark cards from the tray.

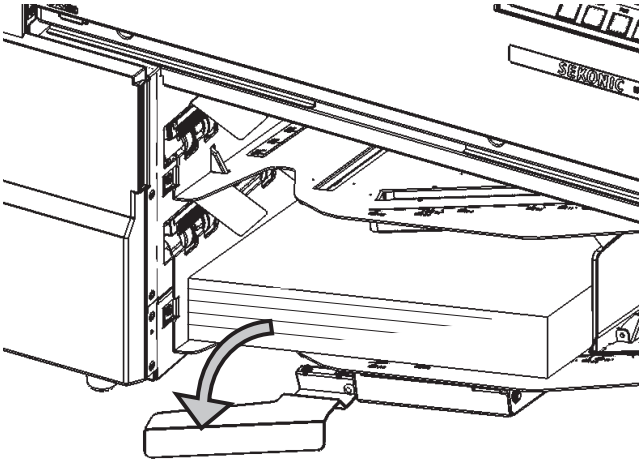

Marking instructions

Marks readable by this device are as follows.

1) Mark size: 0.5 x 3mm or more
2) Readable writing instruments: pencils (black, HB or darker), ballpoint pens (black or blue)
   *When the visible light option is used.

3) Readable marks:

(Good mark example)

(Bad mark example)

Note)
When using a mechanical pencil, make sure to mark with adequate darkness.

Data reading settings

This section explains how to change various sheet-reading settings.
All settings can also be made using computer commands.

■ Setting column

Set the column. The number of columns is different depending on the reading sensor.

Sensor pitch	Setting range	Default value
1/6 inch	1-48 columns	48 columns
0.2 inch(0.2"C)	1-40 columns	40 columns
0.25 inch	1-33 columns	33 columns
0.3 inch	1-27 columns	27 columns

1. Press the MENU switch to enter the menu mode.

2. Use the UP ▲ and DOWN ▼ switches to select the following parameters,
and press the FEED/ENTER switch.

```
Setting of Reading
```

3. Use the UP ▲ and DOWN ▼ switches to select [Setting of Column] setting,
and press the FEED/ENTER switch.
("∗" mark flashes in the first column of the first line on the LCD.)

4. Use the UP ▲ and DOWN ▼ switches to set the value.

```
∗Setting of Column
        = 48 Columns
```

Column setting values
1 - maximum columns

5. Press the FEED/ENTER switch to save the setting value into memory.
(The flashing "∗" mark disappears from the LCD.)

6. Keep pressing the CLEAR/EXIT switch until it returns to normal mode,
or press the MENU switch to return to normal mode.

■ Setting reading method

Setting mark-reading method.
There are six kinds of reading methods: “Top-end timing control type,” “Bottom-end timing control type,” “Direct under type,” “FACOM,” “Mark to mark type (without top-end margin reading),” and “Mark to mark type (with top-end margin reading).”
When setting to “top-end timing control type” or “bottom-end timing control type,” you need to set a control multiple number.

1. Press the [MENU] switch to enter the menu mode.

2. Use the [UP ▲] and [DOWN ▼] switches to select the following parameters, and press the [FEED/ENTER] switch.

```
Setting of Reading
```

3. Use the [UP ▲] and [DOWN ▼] switches to select [Reading Method] setting, and press the [FEED/ENTER] switch.
(“∗” mark flashes in the first column of the first line on the LCD.)

4. Use the [UP ▲] and [DOWN ▼] switches to set the value.

```
*Reading Method
          = Direct
```

Reading method setting values
- Control Fore
- Control Back
- Direct
- FACOM
- Mark to Mark
- Mark to Mark

5. Press the [FEED/ENTER] switch to save the setting value into memory.
(The flashing “∗” mark disappears from the LCD.)

6. Keep pressing the [CLEAR/EXIT] switch until it returns to normal mode, or press the [MENU] switch to return to normal mode.

Setting magnification when timing control types are selected

1. Press the MENU switch to enter the menu mode.

2. Use the UP ▲ and DOWN ▼ switches to select the following parameters, and press the FEED/ENTER switch.

```
Setting of Reading
```

3. Use the UP ▲ and DOWN ▼ switches to select [Magnification] setting, and press the FEED/ENTER switch.
(“∗” mark flashes in the first column of the first line on the LCD.)

4. Use the UP ▲ and DOWN ▼ switches to set the value.

```
∗Magnification
              = 3 Times
```

Magnification setting values
- Top-end timing control type
  1 - 9 (times)
- Bottom-end timing control type
  2 - 9 (times)

5. Press the FEED/ENTER switch to save the setting value into memory.
(The flashing “∗” mark disappears from the LCD.)

6. Keep pressing the CLEAR/EXIT switch until it returns to normal mode, or press the MENU switch to return to normal mode.

■ Setting reading side

You can set the reading side when the optional back-sided reading unit is installed.
The reading side can be set to either “single side” or “double side.”
When reading single-sided sheets, if you set the reading side to “single side,” the back side won’t be read.

1. Press the [MENU] switch to enter the menu mode.

2. Use the [UP ▲] and [DOWN ▼] switches to select the following parameters, and press the [FEED/ENTER] switch.

```
Setting of Reading
```

3. Use the [UP ▲] and [DOWN ▼] switches to select [Reading Side] setting, and press the [FEED/ENTER] switch.
(“∗” mark flashes in the first column of the first line on the LCD.)

4. Use the [UP ▲] and [DOWN ▼] switches to set the value.

```
∗Reading Side
        = Double Side
```

Reading side setting values
- Single Side
- Double Side

5. Press the [FEED/ENTER] switch to save the setting value into memory.
(The flashing “∗” mark disappears from the LCD.)

6. Keep pressing the [CLEAR/EXIT] switch until it returns to normal mode, or press the [MENU] switch to return to normal mode.

■ Setting paper weight

Set detection sensitivity In the same paper weight as seat of use to detect double-feeding errors. Paper weight can be set according to the following five types: “Automatic,” “84g/m^2,” “105g/m^2,” “128g/m^2,” and “157g/m^2.”
If it’s set to “Automatic,” the device detects double-feeding errors based on the weight of first sheet read after the device is activated.
Also, in case it is set to “Automatic”, if the count is set to “0”, all the information of the paper weight is cleared, and the device detects the double-feeding error based on the paper weight after the device reads the first sheet.

1. Press the MENU switch to enter the menu mode.

2. Use the UP ▲ and DOWN ▼ switches to select the following parameters, and press the FEED/ENTER switch.

```
Setting of Reading
```

3. Use the UP ▲ and DOWN ▼ switches to select [Paper Weight] setting, and press the FEED/ENTER switch.
(“∗” mark flashes in the first column of the first line on the LCD.)

4. Use the UP ▲ and DOWN ▼ switches to set the value.

```
*Paper Weight
          = 105g/m2
```

Paper weight setting values
- Automatic
- 84g/m^2
- 105g/m^2
- 128g/m^2
- 157g/m^2

5. Press the FEED/ENTER switch to save the setting value into memory.
(The flashing “∗” mark disappears from the LCD.)

6. Keep pressing the CLEAR/EXIT switch until it returns to normal mode, or press the MENU switch to return to normal mode.

Note)
If it is set to “Automatic”, paper weight is detected based on the weight of the first reading sheet so that it is required to confirm if the double-feeding error, etc., does not occur.

■ Setting the sheet size (Sheet Size)

Set the sheet size to accommodate sheets that are more than 12-inch in length.
(Applicable only for SR-11000 mode)

1. Press the MENU switch to activate Menu mode.

2. Press the UP ▲ and DOWN ▼ buttons to select the following parameter, and press the FEED/ENTER switch.

```
Paper Size
```

(A flashing [*] will display in the first line and first column of the LCD at this time.)

3. Press the UP ▲ and DOWN ▼ switches to select the setting value.

```
*Paper Size
     = Under 12 inch
```

Sheet Size
- Under 12 inch
- Over 12 inch

4. Press the FEED/ENTER switch to store the specified setting value to memory.
(The flashing [*] marks on the LCD will then go out.)

5. Press and hold down the CLEAR/EXIT switch until the system returns to Normal mode or press the MENU switch to switch back to Normal mode.

Error detection settings

Refer to the table below for a list of error detection settings that can be used on the device and set the appropriate settings as desired.
Settings can also be made using communications (commands).

	Default value
Automatic paper discharge “Yes” or “No”	Yes
Sheet empty detection “Yes” or “No”	No
Timing error detection “Yes” or “No”	Yes
Double-feeding detection “Yes” or “No”	Yes
Left end skew detection “Yes” or “No”	Yes

See **“Error displays and countermeasures” in this manual on P.77-P.82.**

Error detection settings

1. Press the MENU switch to enter the menu mode.

2. Use the UP ▲ and DOWN ▼ switches to select the following parameters, and press the FEED/ENTER switch.

```
Setting of Error
                Detection
```

3. Use the UP ▲ and DOWN ▼ switches to select Setting of Error Detection, and press the FEED/ENTER switch.
(“∗” mark flashes in the first column of the first line on the LCD.)

4. Use the UP ▲ and DOWN ▼ switches to select individual error detection setting values.
(See the previous table for setting values.)

5. Press the FEED/ENTER switch to save individual setting values into memory.
(The flashing “∗” mark disappears from the LCD.)

6. Keep pressing the CLEAR/EXIT switch until it returns to normal mode, or press the MENU switch to return to normal mode.

Buzzer settings

You can set the device to either use the buzzer or not use it.
If you set it to use the buzzer, you can set the volume and tone.
If you set it not to use the buzzer, the buzzer will not sound.

■ Buzzer control

1. Press the MENU switch to enter the menu mode.

2. Use the UP ▲ and DOWN ▼ switches to select the following parameters, and press the FEED/ENTER switch.

```
Setting of Buzzer
```

3. Use the UP ▲ and DOWN ▼ switches to select [Buzzer Control] setting, and press the FEED/ENTER switch.
(“∗” mark flashes in the first column of the first line on the LCD.)

4. Use the UP ▲ and DOWN ▼ switches to set the value.

```
*Buzzer Control
                =  Valid
```

Buzzer control setting values
- Valid
- Invalid

5. Press the FEED/ENTER switch to save the setting value into memory.
(The flashing “∗” mark disappears from the LCD.)

6. Keep pressing the CLEAR/EXIT switch until it returns to normal mode, or press the MENU switch to return to normal mode.

■ Buzzer sound adjustment

1. Press the MENU switch to enter the menu mode.

2. Use the UP ▲ and DOWN ▼ switches to select the following parameters, and press the FEED/ENTER switch.

```
Setting of Buzzer
```

3. Use the UP ▲ and DOWN ▼ switches to select [Buzzer Sound Adjustment] setting, and press the FEED/ENTER switch.
(“∗” mark flashes in the first column of the first line on the LCD.)

4. Use the UP ▲ and DOWN ▼ switches to set the value.

```
∗Buzzer Sound
      Adjustment= 3
```

Buzzer sound adjustment setting values
1 - 5

5. Press the FEED/ENTER switch to save the setting value into memory.
(The flashing “∗” mark disappears from the LCD.)

6. Keep pressing the CLEAR/EXIT switch until it returns to normal mode, or press the MENU switch to return to normal mode.

Printer settings

A character is 12 x 9 pixels.
Though character height is fixed (about 3mm), widths can vary.
However, the number of pixels (9 pixels) does not change, so if you enlarge a character, the space between pixels increases, making the character appear lighter.
Printer settings differ depending on the operating mode.

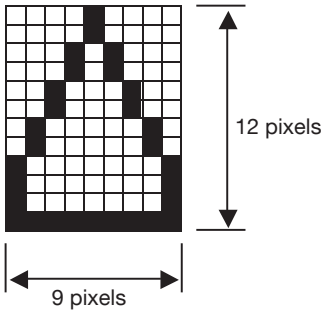

■ Printer control

You can set the device to either use the printer or not use it.
If you do not use the printer function,set the invalid.

1. Press the MENU switch to enter the menu mode.

2. Use the UP ▲ and DOWN ▼ switches to select the following parameters, and press the FEED/ENTER switch.

```
Setting of Printer
```

3. Use the UP ▲ and DOWN ▼ switches to select [Printer Control] setting, and press the FEED/ENTER switch.
(“∗” mark flashes in the first column of the first line on the LCD.)

4. Use the UP ▲ and DOWN ▼ switches to set the value.

```
∗Printer Control
          = Valid
```

Printer control setting values
- Valid
- Invalid

5. Press the FEED/ENTER switch to save the setting value into memory.
(The flashing “∗” mark disappears from the LCD.)

6. Keep pressing the CLEAR/EXIT switch until it returns to normal mode, or press the MENU switch to return to normal mode.

■ Character size setting

1. The width of a character can be increased in 0.8mm increments between 4.0mm and 6.4mm.

No.	Size (a)
1	4.0mm
2	4.8mm
3	5.6mm
4	6.4mm

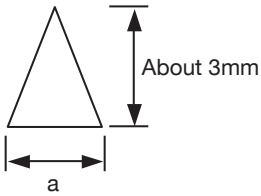

(1) Press the MENU switch to enter the menu mode.

(2) Use the UP ▲ and DOWN ▼ switches to select the following parameters, and press the FEED/ENTER switch.

```
Setting of Printer
```

(3) Use the UP ▲ and DOWN ▼ switches to select [Size] setting, and press the FEED/ENTER switch.
(“∗” mark flashes in the first column of the first line on the LCD.)

(4) Use the UP ▲ and DOWN ▼ switches to set the value.

```
* Size
                    =  4.0  mm
```

Character size setting values
4.0 - 6.4 (mm)
0.8mm increments

(5) Press the FEED/ENTER switch to save the setting value into memory.
(The flashing “∗” mark disappears from the LCD.)

(6) Keep pressing the CLEAR/EXIT switch until it returns to normal mode, or press the MENU switch to return to normal mode.

[Setting example 1]
When the size is set at 4.0mm

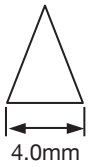

[Setting example 2]
When the size is set at 6.4mm

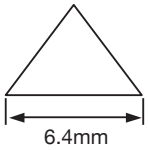

Character size setting

2. Character interval setting

The space between printed characters can be increased in 0.1mm increments between 0.8mm to 92mm.

No.	Interval (b)
1	0.8mm
2	0.9mm
3	1.0mm
:	:
911	91.8mm
912	91.9mm
913	92.0mm

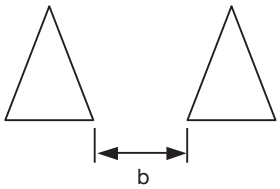

(1) Press the MENU switch to enter the menu mode.

(2) Use the UP ▲ and DOWN ▼ switches to select the following parameters, and press the FEED/ENTER switch.

```
Setting of Printer
```

(3) Use the UP ▲ and DOWN ▼ switches to select [Character Pitch] setting, and press the FEED/ENTER switch.
(“∗” mark flashes in the first column of the first line on the LCD.)

(4) Use the UP ▲ and DOWN ▼ switches to set the value.

```
∗Character Pitch
        = 0.8 mm
```

Character pitch setting values
0.8 - 92.0 (mm)
0.1mm increments

(5) Press the FEED/ENTER switch to save the setting value into memory.
(The flashing “∗” mark disappears from the LCD.)

(6) Keep pressing the CLEAR/EXIT switch until it returns to normal mode,
or press the MENU switch to return to normal mode.

[Setting example 1]
When the size is set at 4.0mm, the magnification is 1, and the interval is 0 pixel.
Character interval = 0.4 x (1 + 0 + 1) = 0.8mm

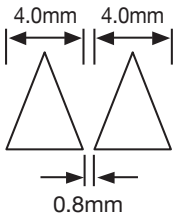

[Setting example 2]
When the size is set at 6.4mm, the magnification is 1, and the interval is 5 pixels.
Character interval = 0.8 x (1 + 5 + 1) = 5.6mm

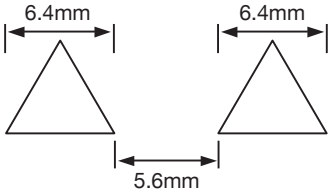

Low power consumption settings

This device can be set to reduce power consumption in standby mode.
The low-power consumption settings make the device automatically reduce power consumption when it is not used for a certain period.

Sleep mode = low-power consumption condition that it automatically switches to when it is not used for a set time (sleep duration).

Standby mode = a second low-power consumption condition that it automatically and continuously switches to after shifting to the sleep mode when it is not used for a set time (standby duration).
(Power consumption is reduced further than sleep mode.)

■ Sleep duration

1. Press the MENU switch to enter the menu mode.

2. Use the UP ▲ and DOWN ▼ switches to select the following parameters, and press the FEED/ENTER switch.

```
Setting of
        Electric Power
```

3. Use the UP ▲ and DOWN ▼ switches to select [Time for Power Save] setting, and press the FEED/ENTER switch.
(“∗” mark flashes in the first column of the first line on the LCD.)

4. Use the UP ▲ and DOWN ▼ switches to set the value.

```
∗Time for Power Save
          = 5 Minutes
```

Time for Power Save setting values
- None
- 1 - 60 (Minutes)

*Can be set in minute increments.

5. Press the FEED/ENTER switch to save the setting value into memory.
(The flashing “∗” mark disappears from the LCD.)

6. Keep pressing the CLEAR/EXIT switch until it returns to normal mode, or press the MENU switch to return to normal mode.

■ Standby duration

1. Press the MENU switch to enter the menu mode.

2. Use the UP ▲ and DOWN ▼ switches to select the following parameters, and press the FEED/ENTER switch.

```
Setting of
        Electric Power
```

3. Use the UP ▲ and DOWN ▼ switches to select [Time for Standby] setting, and press the FEED/ENTER switch.
(“∗” mark flashes in the first column of the first line on the LCD.)

4. Use the UP ▲ and DOWN ▼ switches to set the value.

```
*Time for Standby
            = 5 Minutes
```

Time for Standby setting values
- None
- 1 - 60 (Minutes)

*Can be set in minute increments.

5. Press the FEED/ENTER switch to save the setting value into memory.
(The flashing “∗” mark disappears from the LCD.)

6. Keep pressing the CLEAR/EXIT switch until it returns to normal mode, or press the MENU switch to return to normal mode.

Note)

(1) Releasing Sleep/Standby mode
Sleep/Standby mode will be cancelled in the following conditions.
- When an operation is entered on the panel screen.
- When a descending command is sent.
- When an error occurs.
- When loading paper on the hopper.

(2) Conditions in which Sleep/Standby mode cannot be attained
Sleep/Standby mode is not available in the following conditions.
- When displaying a menu on the panel screen.
- When an error occurs.

(3) Stacker cover open error cannot be detected in Standby mode.

Barcode settings (when barcode unit is installed)

■ Barcode control

1. Press the [MENU] switch to enter the menu mode.

2. Use the [UP ▲] and [DOWN ▼] switches to select the following parameters, and press the [FEED/ENTER] switch.

```
Setting of Barcode
```

3. Select [Go Out Direction] setting and press the [FEED/ENTER] switch.
(“∗” mark flashes in the first column of the first line on the LCD.)

4. Use the [UP ▲] and [DOWN ▼] switches to set the value.

```
∗Barcode Control
              = Valid
```

Barcode control setting values
• Valid • Invalid

5. Press the [FEED/ENTER] switch to save the setting value into memory.
(The flashing “∗” mark disappears from the LCD.)

6. Keep pressing the [CLEAR/EXIT] switch until it returns to normal mode, or press the [MENU] switch to return to normal mode.

Displaying various information

This section explains how to display various setting information.

■ Displaying the version

This displays the versions of the “main body unit,” “front side reading unit,” “back side reading unit,” “stacker unit,” “printer unit,” “barcode unit” and other items. (“Back side reading unit,” “stacker unit,” “printer unit,” and “barcode unit” display only if they are installed.)
Versions are displayed in a two-digit format.

1. Press the MENU switch to enter the menu mode.

2. Use the UP ▲ and DOWN ▼ switches to select the following parameters,
and press the FEED/ENTER switch.

```
Display Mode
```

3. Use the UP ▲ and DOWN ▼ switches to select [Version Info.],
and press the FEED/ENTER switch.

Note)
If “Version= @@” appears in the display,contact the dealer where you purchase.

```
Main Body Unit
        Version = 00
```

The present version is displayed.
The name of each unit is displayed.

4. Use the UP ▲ and DOWN ▼ switches to display individual versions.

5. Keep pressing the CLEAR/EXIT switch until it returns to normal mode,
or press the MENU switch to return to normal mode.

■ Displaying front side reading sensor settings

This displays the settings for “sensor pitch” and “sensor type” for the front side reading unit in this device.

1. Press the MENU switch to enter the menu mode.

2. Use the UP ▲ and DOWN ▼ switches to select the following parameters, and press the FEED/ENTER switch.

```
Display Mode
```

3. Use the UP ▲ and DOWN ▼ switches to select [Type of Front Reading Sensor] display, and press the FEED/ENTER switch.

4. Use the UP ▲ and DOWN ▼ witches to display the settings.

Sensor pitch

```
Sensor Pitch
        = 0.2 inch
```

Sensor pitch display
- 0.2 inch
- 0.25 inch
- 0.3 inch
- 1/6 inch
- 0.2 C inch

Sensor type

```
Type of Sensor
        = Infra Red
```

Sensor type display
- Infra Red
- Visible Red

5. Keep pressing the CLEAR/EXIT switch until it returns to normal mode, or press the MENU switch to return to normal mode.

■ Displaying back side reading sensor settings

This displays the settings for “sensor pitch” and “sensor type” for the back side reading unit in this device. (This display is available only when the device has a back side reading unit attached.)

1. Press the [MENU] switch to enter the menu mode.

2. Use the [UP ▲] and [DOWN ▼] switches to select the following parameters, and press the [FEED/ENTER] switch.

```
Display Mode
```

3. Use the [UP ▲] and [DOWN ▼] switches to select [Type of Back Reading Sensor] display, and press the [FEED/ENTER] switch.

4. Use the [UP ▲] and [DOWN ▼] switches to display the settings.

Sensor pitch

```
Sensor Pitch
        = 0.2 inch
```

Sensor pitch display
- 0.2 inch
- 0.25 inch
- 0.3 inch
- 1/6 inch
- 0.2 C inch

Sensor type

```
Type of Sensor
        = Infra Red
```

Sensor type display
- Infra Red
- Visible Red

5. Keep pressing the [CLEAR/EXIT] switch until it returns to normal mode, or press the [MENU] switch to return to normal mode.

■ Displaying optional unit settings

This displays the settings for an optional unit installed in this device.

1. Press the MENU switch to enter the menu mode.

2. Use the UP ▲ and DOWN ▼ switches to select the following parameters, and press the FEED/ENTER switch.

```
Display Mode
```

3. Use the UP ▲ and DOWN ▼ switches to select [Type of Option] display, and press the FEED/ENTER switch.

4. Use the UP ▲ and DOWN ▼ switches to display the options.

Reading sensor unit

```
Reading Sensor Unit
        = Single Side
```

Reading sensor unit display settings
- Single Side
- Double Side

Barcode unit
(This display is available only when the device has a barcode unit attached.)

```
Barcode Unit
        = Vertical
```

Barcode unit display
- Not Unit
- Vertical
- Horizontal

5. Keep pressing the CLEAR/EXIT switch until it returns to normal mode, or press the MENU switch to return to normal mode.

■ Displaying total count

This displays total count in this device.

1. Press the MENU switch to enter the menu mode.

2. Use the UP ▲ and DOWN ▼ switches to select the following parameters,

```
Display Mode
```

and press the FEED/ENTER switch.

3. Use the UP ▲ and DOWN ▼ switches to select [Total count] display,

and press the FEED/ENTER switch.

```
Total count
          =  ########
```

Total count display
00000000~99999999

4. Keep pressing the CLEAR/EXIT switch until it returns to normal mode,

or press the MENU switch to return to normal mode.

Note)
When the sheet is left to the hopper the reading operation is discontinued, The actually count and error count is included in the total count because the count is not saved.

■ Displaying serial number

This displays serial number of this device.

1. Press the MENU switch to enter the menu mode.

2. Use the UP ▲ and DOWN ▼ switches to select the following parameters,

```
Display Mode
```

and press the FEED/ENTER switch.

3. Use the UP ▲ and DOWN ▼ switches to select [Serial number] display,

and press the FEED/ENTER switch.

```
Serial number
          =########
```

Serial number display settings
000000000~zzzzzzzzz

4. Keep pressing the CLEAR/EXIT switch until it returns to normal mode,

or press the MENU switch to return to normal mode.

Operating tests

This section explains operating test procedures.

■ Feed test 1

This test reads the check sheets included in the package to test if the device reads them properly.
If the device doesn't read the check sheets properly, the reading test will stop.
Once reading of the check sheets starts, the test will continue until an error occurs or the hopper is empty.

1. Press the MENU switch to enter the menu mode.

2. Use the UP ▲ and DOWN ▼ switches to select the following parameters,
and press the FEED/ENTER switch.

```
Test Mode
```

3. Use the UP ▲ and DOWN ▼ switches to select [Feed Test 1].

```
Feed Test 1
E:          0 , T:          0
   Error Count     Total Count
```

E: Error count numbers
T: Total count numbers

4. Press the FEED/ENTER switch to confirm the selection and display [Feed Test 1].
("∗" mark flashes in the first column of the first line on the LCD.)

5. Use the UP ▲ and DOWN ▼ switches to select the setting value.

```
Feed Test 1
                = Start
```

Feed test 1 setting values
• Stop • Start

6. Press the FEED/ENTER switch to start/stop feed test 1.
(The flashing "∗" mark disappears from the LCD, and the test will start/stop.)

7. Keep pressing the CLEAR/EXIT switch until it returns to normal mode,
or press the MENU switch to return to normal mode.

Note)
- You cannot return to normal mode while the test is running.
- If a reading error occurs on both sides of a sheet, the error count will be two.
- If the stacker unit is installed and an error occurs, paper will be transferred to the selection tray.

■ Feed test 2

This test reads the check sheets included in the package to test if the device reads them properly.
Even if the device doesn't read something properly, the test will continue.
Once reading of the check sheets starts, the test will continue until an error other than a reading occurs or the hopper is empty.

1. Press the [MENU] switch to enter the menu mode.

2. Use the [UP ▲] and [DOWN ▼] switches to select the following parameters,
and press the [FEED/ENTER] switch.

```
Test Mode
```

3. Use the [UP ▲] and [DOWN ▼] switches to select [Feed Test 2].

```
Feed Test 2
E :          0 , T :          0
```

Error Count | Total Count

E: Error count numbers
T: Total count numbers

4. Press the [FEED/ENTER] switch to confirm the selection and display [Feed Test 2].
("∗" mark flashes in the first column of the first line on the LCD.)

5. Use the [UP ▲] and [DOWN ▼] switches to select the setting value.

```
Feed Test 1
                    = Start
```

Feed test 2 setting values
• Stop • Start

6. Press the [FEED/ENTER] switch to start/stop feed test 2.
(The flashing "∗" mark disappears from the LCD, and the test will start/stop.)

7. Keep pressing the [CLEAR/EXIT] switch until it returns to normal mode,
or press the [MENU] switch to return to normal mode.

Note)
- You cannot return to normal mode while the test is running.
- If a reading error occurs on both sides of a sheet, the error count will be two.
- If the stacker unit is installed and an error occurs, paper will be transferred to the selection tray.

■ Printer test

The test characters is printed on the fed sheet and the sheet will be discharged. (This test will be conducted only when stacker unit and printer unit are installed.)
The number of characters printed varies depending on the printer settings, and character size and interval settings.
Once reading of the check sheets starts, the test will continue until an error occurs or the hopper is empty.

Test characters:
“!”#$%&’()*+,–./0123456789:;<=>?@ABCDEFGHIJKLMNOPQRSTUVWXYZ[¥]^_。「」、・ヲァィゥェォャュョッーアイウエオカキクケコサシスセソタチツテトナニヌネノハヒフヘホマミムメモヤユヨラリルレロワン ”

1. Press the MENU switch to enter the menu mode.

2. Use the UP ▲ and DOWN ▼ switches to select the following parameters,

```
Test Mode
```

and press the FEED/ENTER switch.

3. Use the UP ▲ and DOWN ▼ switches to select [Printer Test].

```
Printer Test
    Count :          0
                Count
```

4. Press the FEED/ENTER switch to confirm the selection and display [Printer Test].
(“∗” mark flashes in the first column of the first line on the LCD.)

5. Use the UP ▲ and DOWN ▼ switches to select the setting value.

```
∗Printer Test
                = Start
```

Printer test setting values
• Stop • Start

6. Press the FEED/ENTER switch to start/stop Printer test.
(The flashing “∗” mark disappears from the LCD, and the test will start/stop.)

7. Keep pressing the CLEAR/EXIT switch until it returns to normal mode,
or press the MENU switch to return to normal mode.

Note)
You cannot return to normal mode while the test is running.

■ Printer inkjet test

This test is done when the printing of sheets is not possible, is not clear.

1. Press the MENU switch to enter the menu mode.

2. Use the UP ▲ and DOWN ▼ switches to select the following parameters,

```
Test Mode
```

and press the FEED/ENTER switch.

3. Use the UP ▲ and DOWN ▼ switches to select [Printer Jet Test].

4. Press the FEED/ENTER switch to confirm the selection and display [PJet Test Start = Start].

("∗" mark flashes in the first column of the first line on the LCD.)

5. Press the FEED/ENTER switch to do Printer jet test one time.(about 0.5 sec.)

(When Printer jet test ends , the flashing "∗" mark disappears from the LCD.)

6. Keep pressing the CLEAR/EXIT switch until it returns to normal mode,

or press the MENU switch to return to normal mode.

Note)
You cannot return to normal mode while the test is running.

Clearing paper jams

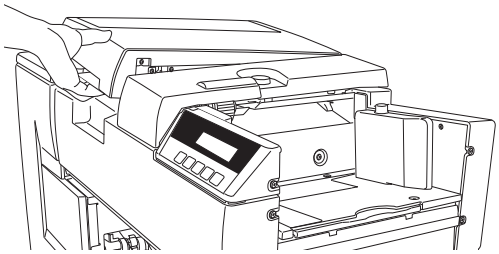

1. Release the grip lock on the lock lever, and slowly lift up the top cover. Once the top cover is up far enough, remove the paper from the device.

2. Open the front door of the stacker unit.

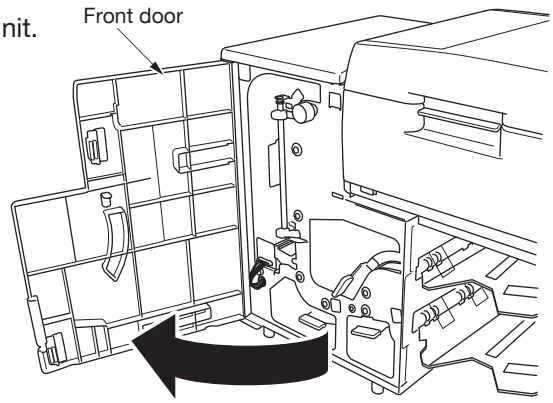

3. Open the jam release levers (4 levers) or turn the jam-removing knob to remove jammed paper.

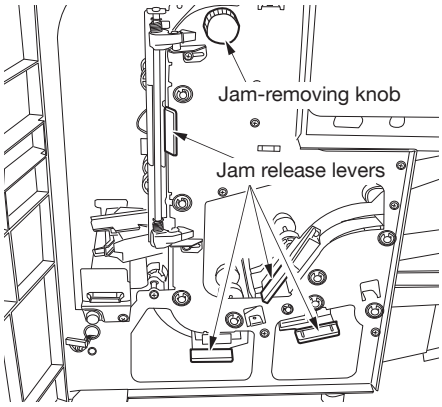

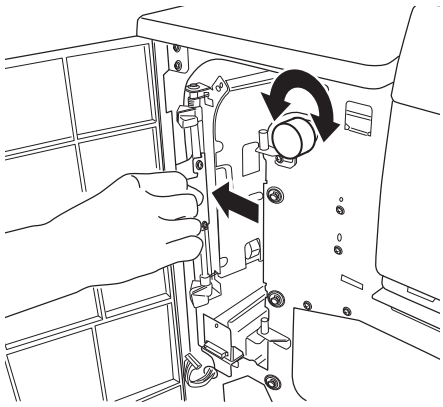

4. After removing jammed paper, close the jam release levers.

5. Close the front door of the stacker unit.

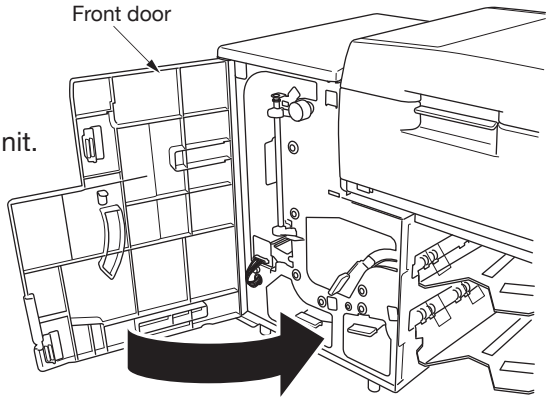

Option:Back side reading unit

If you install a back side reading unit in the device, both sides of a sheet can be read.
When installing the back side reading unit, set the reading side settings at the same time.

See **"Data reading settings ■Setting reading side" in this manual. P.34**

Please see the following pages regarding confirmation of settings.

See **"Displaying various information**
■ Displaying the version" in this manual. P.47

"Displaying various information
■ Displaying back side reading sensor settings" in this manual. P.49

"Displaying various information
■ Displaying optional unit settings" in this manual. P.50

Barcode unit / V • Barcode unit / H

Attaching a barcode unit to this device will enable you to read barcodes on sheets.

■ Barcode readable area

The barcode readable area differs depending on the kind of barcode unit.

1. Barcode unit / V (vertical feeding)

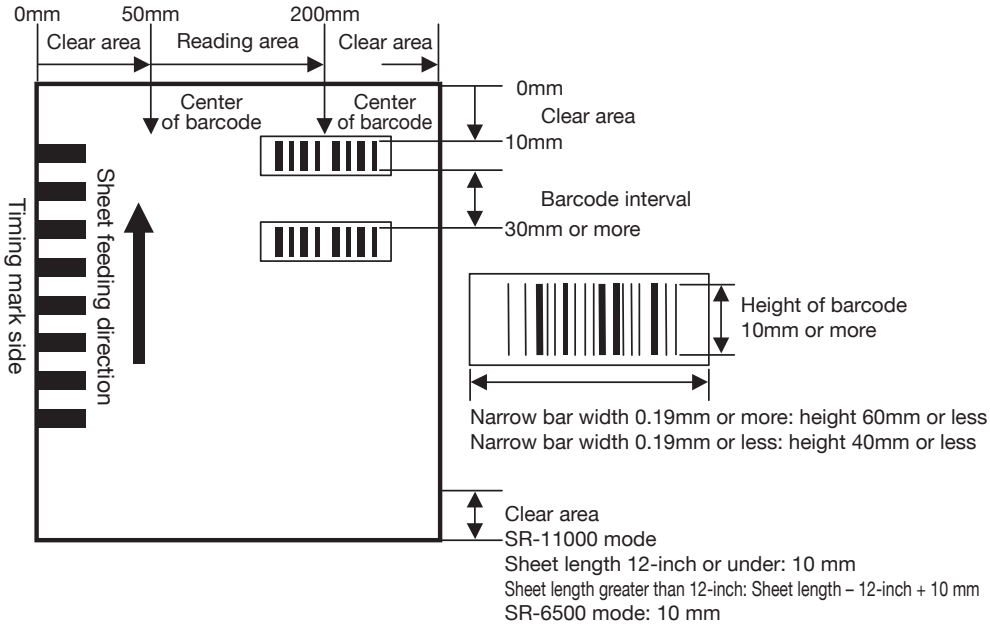

Examples of rear clear areas

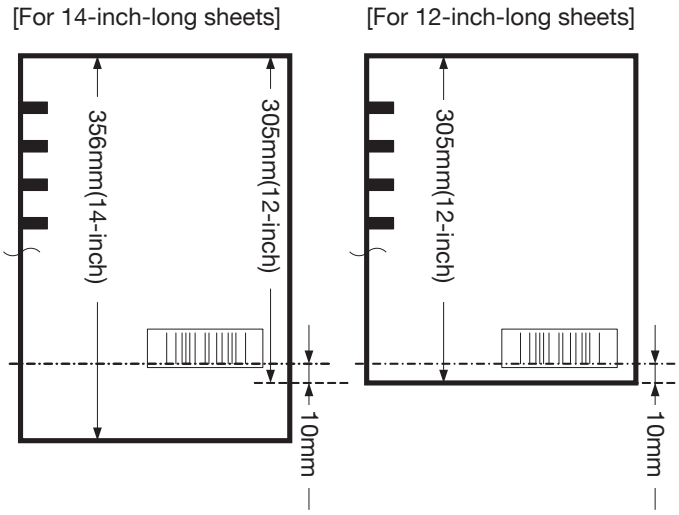

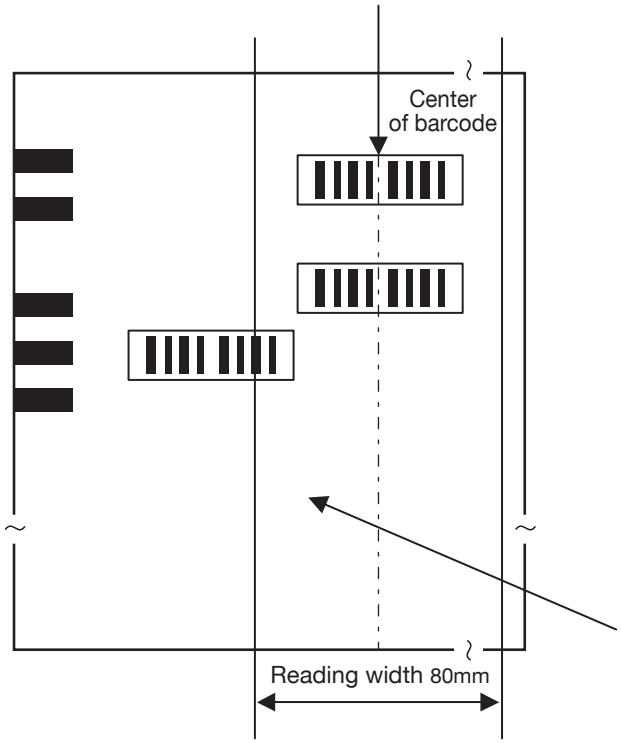

Note)
Adjust the barcode center when reading a number of sheets .In addition when it makes the barcode adjoin which is not read, do not make it go into reading area.

2. Barcode unit / H (horizontal feeding)

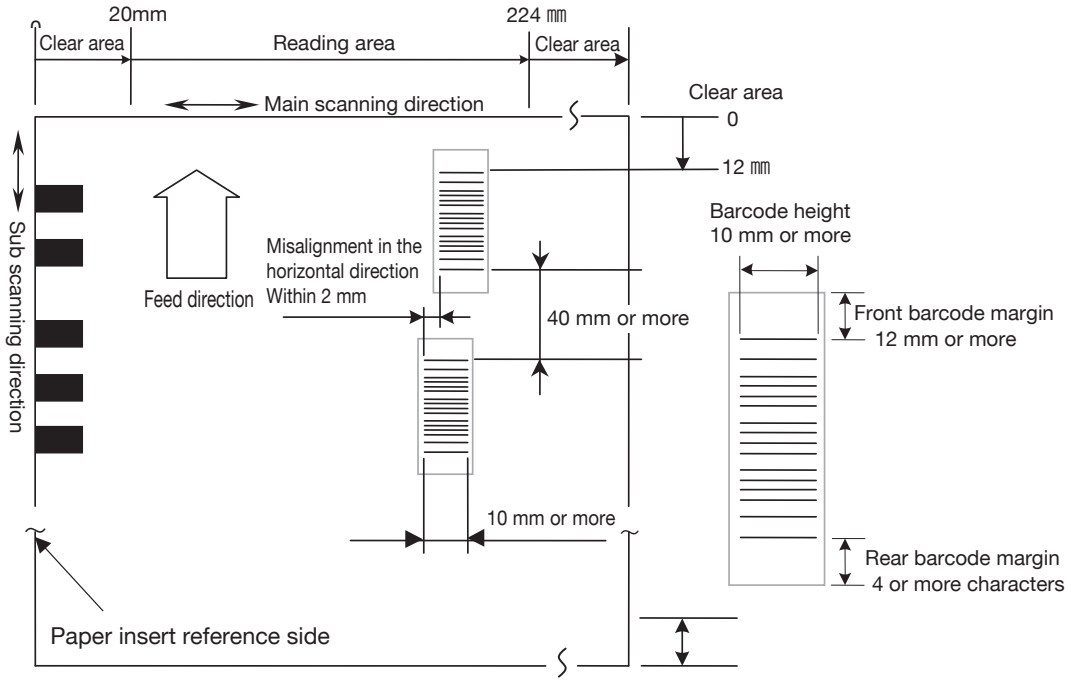

Clear area
SR-11000 mode
Sheet length of 252 mm or under: 12 mm
Sheet length exceeding 252 mm: Sheet length – 12 inches + 65 mm
SR-6500 mode: 65 mm

Examples of rear clear areas

[For 14-inch-long sheets] [For 12-inch-long sheets] [For 252-mm-long sheets]

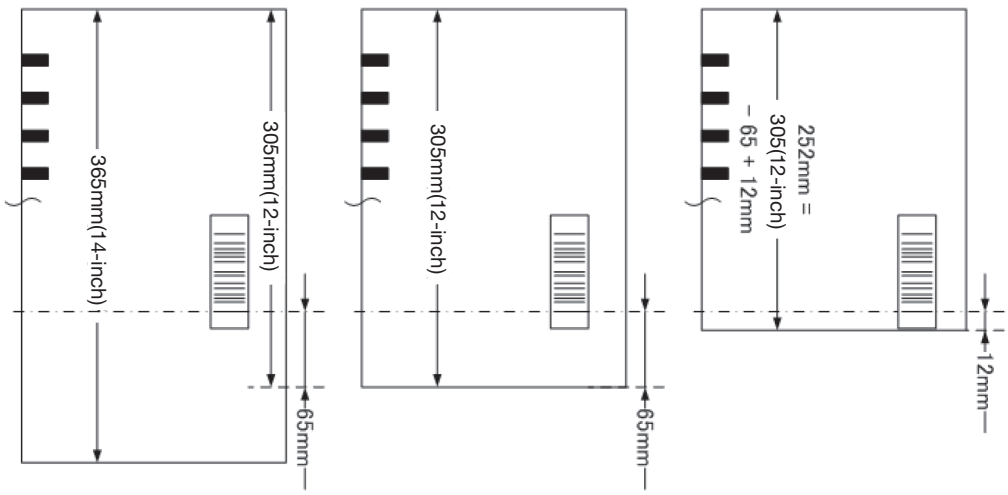

■ Barcode reading position adjustment

1. Turn the power off.

2. Remove the carrier cover.

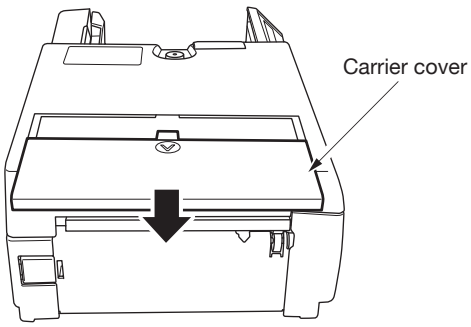

3. Loosen the barcode unit position fixing screw, move the barcode unit according to barcode position, and tighten the screw to secure it.
* The scale on the positioning sticker indicates center of the barcode position from the edge of the paper(Timing mark side). The barcode position is determined by aligning the barcode unit position fixing screw with the scale on the sticker.

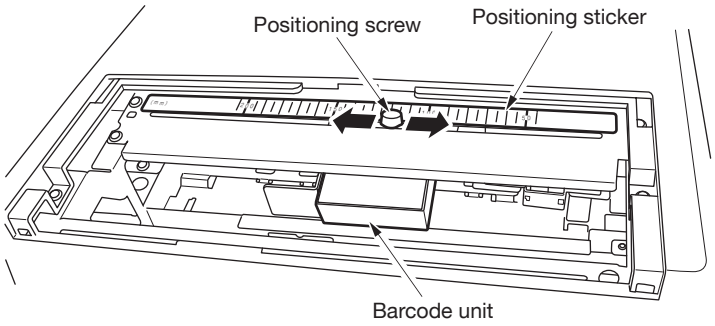

4. Turn the power on.

5. check reading using a diagnostic utility.
* If a reading error occurs, the barcode reading position may be misaligned, so make an adjustment.

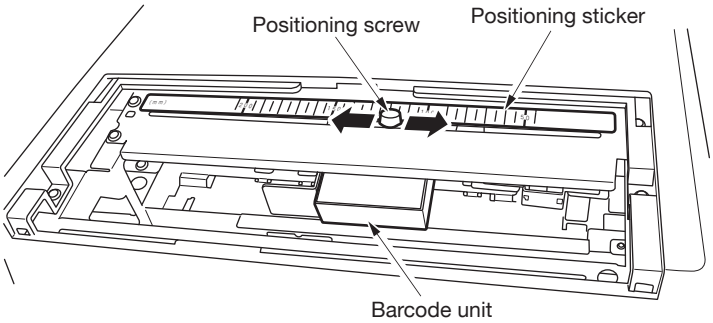

6. If the barcode reading position is properly aligned, close the carrier cover.

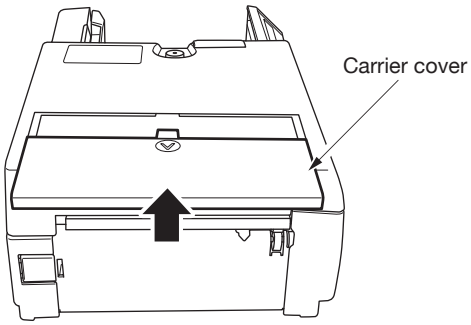

■ Barcode unit precautions for use

(1) When applying barcode stickers, etc. on a sheet, make sure that sheet thickness with stickers is 0.25mm or less.

(2) When applying barcode stickers, etc. on a sheet, avoid the grayed area below.

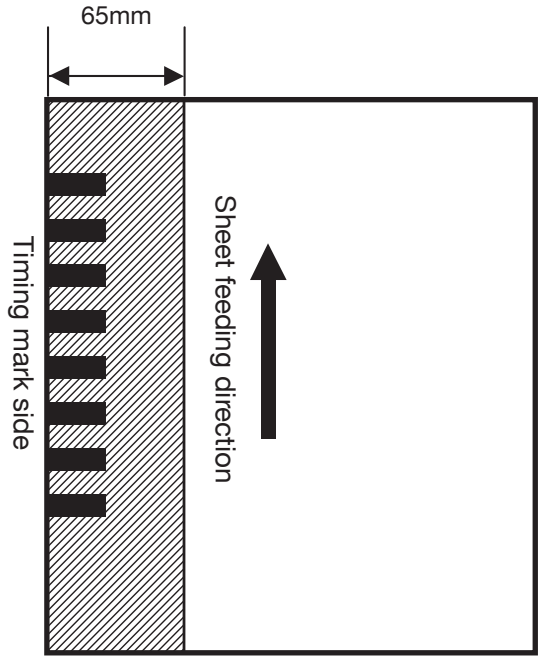

(3) Make barcodes according to the following specifications and guidelines.
- AIM USS (Automatic Identification Manufacturers barcode symbol specifications)
- JIS

  JIS X 0501 Barcode symbols for common product codes
  JIS X 0502 Barcode symbols for logistic product codes
  JIS X 0503 Barcode symbol NW-7 and code 39 basic specifications

(4) Faded, chipped, and bleeding barcodes cannot be read. Please note that barcodes printed with low-resolution printers such as dot-matrix printers and inkjet printers tend to have similar results.

(5) If the sensor area becomes dirty with paper powder, use a soft cloth, a cotton swab, or similar materials soaked with plastic cleaner, or use a cloth for glasses to wipe it.

Cleaning

Dirty rollers, reading lenses, and sensors can cause various operational errors. Clean them regularly using the following procedures. Cleaning intervals differ depending on usage conditions (usage frequency, quality of paper used, etc.) Cleaning periods are for your reference -- clean the device soon if you notice dirt or other irregularities.

⚠ Warning

- **WHEN CLEANING THE DEVICE ,**
  DO NOT SPRAY ANY MATERIALS CONTAINING AN INFLAMMABLE GAS OR LIQUID AND BE SURE TO KEEP THIS KIND OF MATERIALS AWAY FROM THIS DEVICE.
  Use a cleaning cloth with suitable amount of cleaning liquid to wipe off well, after removing the power plug from the outlet and the device becomes to cool off.
- **WHEN CLEANING THE DEVICE ,**
  BE SURE TO REMOVE THE POWER PLUG FROM THE OUTLET.
  There is a threat that a fire or an electric shock cause the unexpected accident.

■ Cleaning procedures

Main body unit

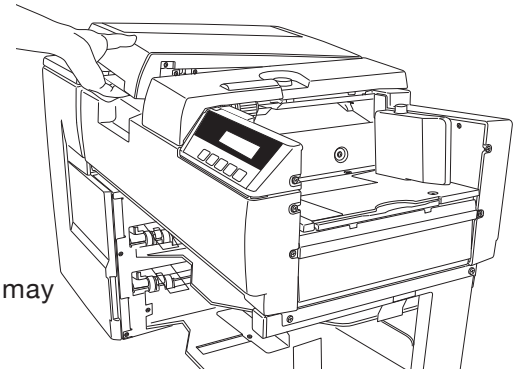

1. Turn the power off and remove the power cord from the outlet.

2. Grasp the lock lever to release the lock, and push the top cover up to open it.

⚠ **Caution)**
If you do not remove the stopper, you may damage the product.

3. The screw of a right figure arrow is loosened, a stopper is slid rightward, and it is made a release position.
Top cover comes to open greatly.

4. Clean necessary parts.

5. After cleaning slides a stopper leftward and tightens a screw.

⚠ **Warning)**
If a stopper is not returned to the original position, fingers and other body parts could be pinched and injured by the back hinge.by the back hinge.

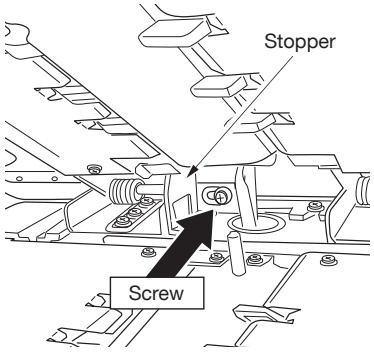

6. Close the top cover.
Slowly close the top cover and press it until there is a click sound that indicates it is locked.

■ Cleaning point

(1) Cleaning rollers
After feeding 50,000 sheets, a large number of cards, or when using carbon paper, wipe the rollers softly with a clean cloth slightly wetted with disinfectant alcohol (ethanol).
* If the rollers are stained, the stains may rub off on cards or other various malfunctions may occur.

(2) Cleaning reading lens
Clean the reader lens by softly wiping it with a clean cloth slightly wetted with disinfectant alcohol (ethanol) once a month or every 50,000 sheets.
* If the reading lens is stained, reading errors may occur.

(3) Cleaning various sensors
Softly wipe the sensors with a clean cloth slightly wetted with disinfectant alcohol (ethanol) once a month or every 50,000 sheets.
Use air blow etc. when cleaning the left skew sensor section.
*If the sensors are stained (with paper powder, etc.) detection errors may occur.

Note)
*Cleaning intervals may differ depending on usage conditions (usage frequency, quality of paper used, etc.)
*Use a solution of 1 part ethanol to 5 parts water as the diluted disinfectant alcohol.

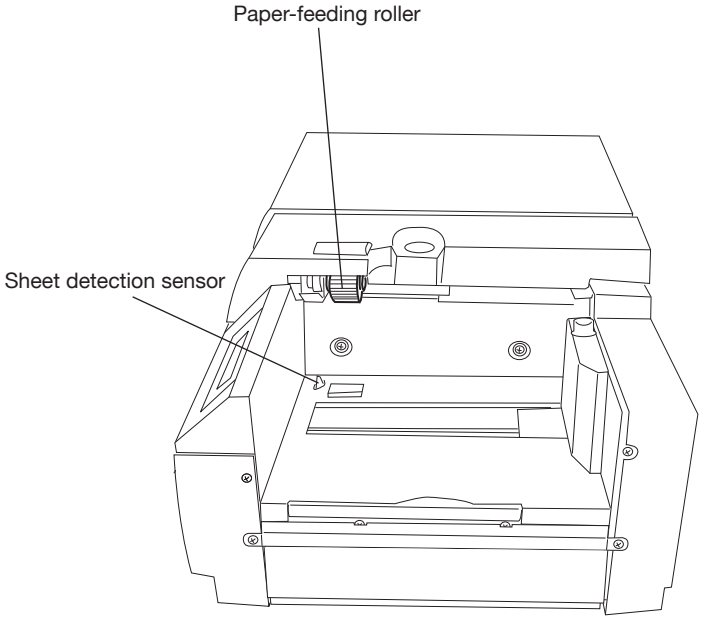

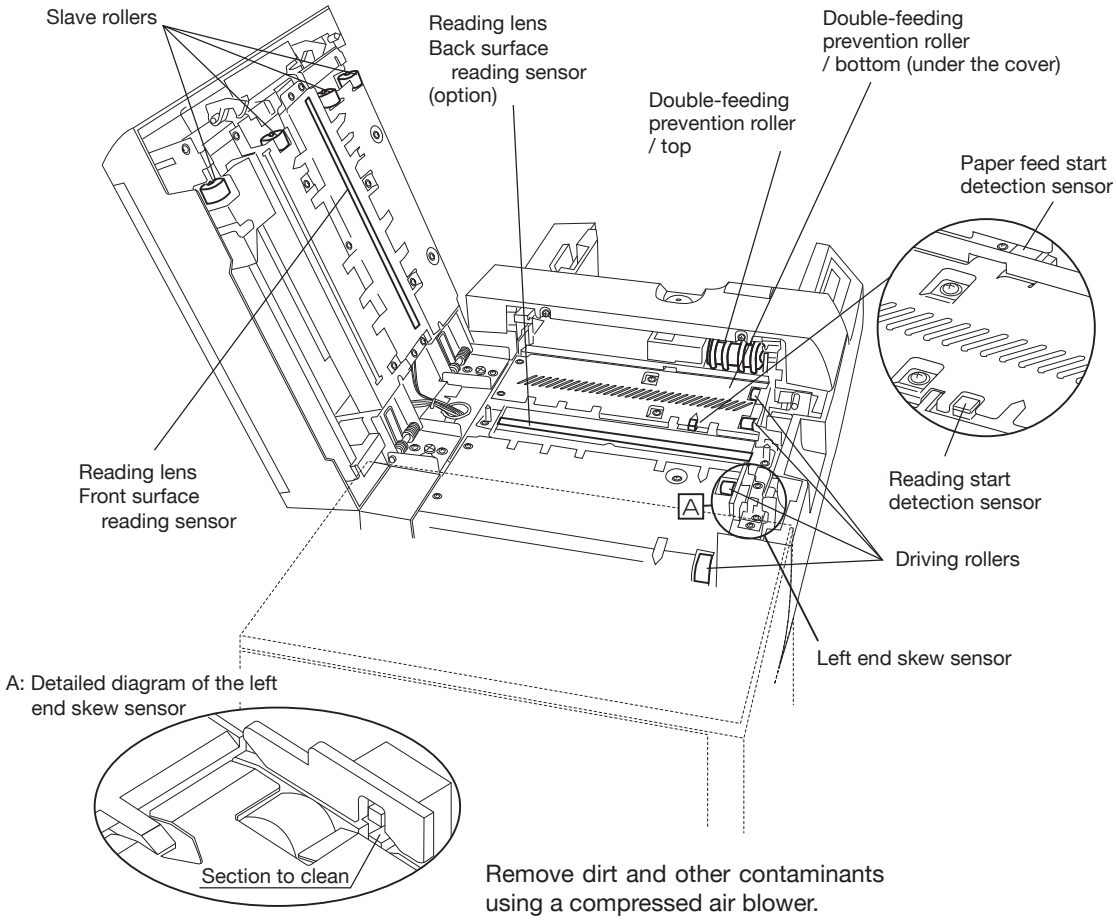

Remove dirt and other contaminants using a compressed air blower.

Stacker unit

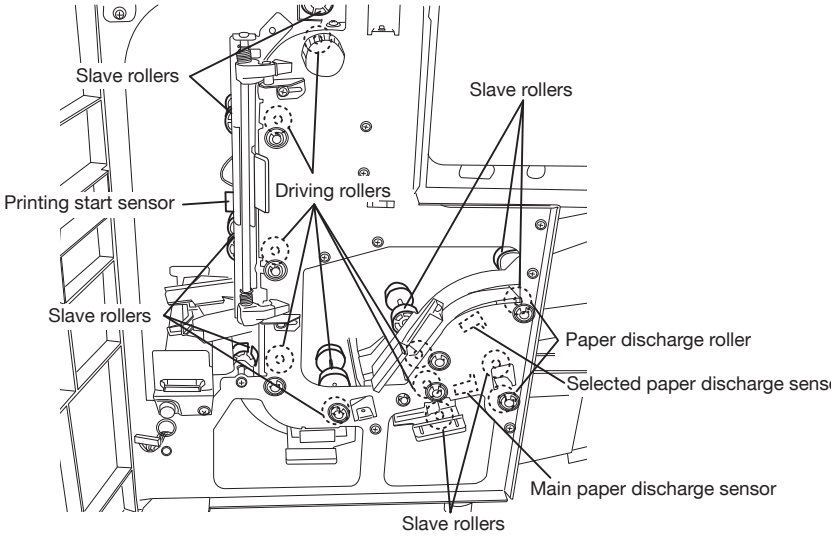

Stacker unit

1. Turn the power off and remove the power cord from the outlet.

2. Open the front door of the stacker unit.

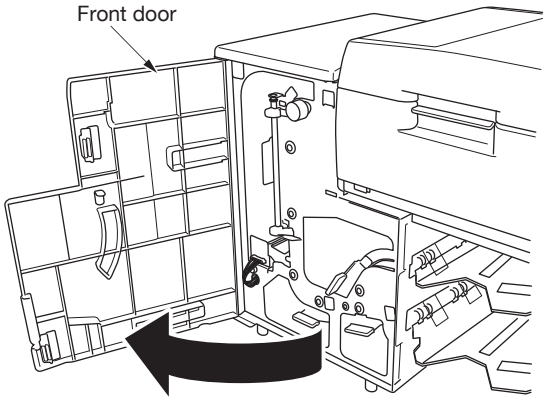

3. Open the jam release lever.

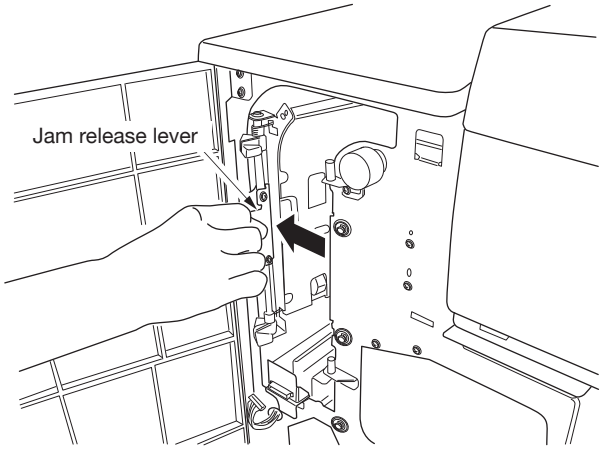

4. Clean necessary parts.

5. Close the jam release lever.

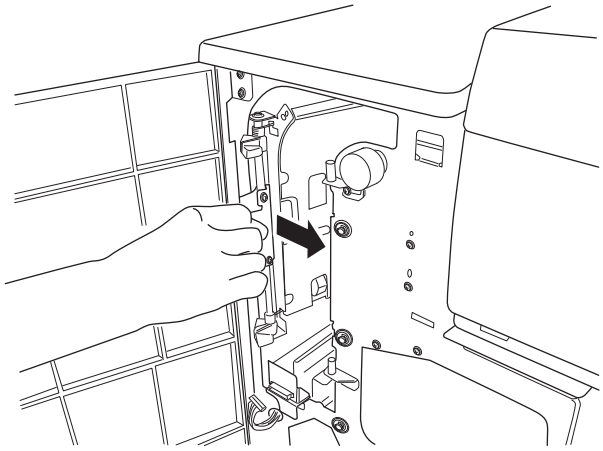

6. Clean the remaining three parts in the same manner as in steps 3 to 5.

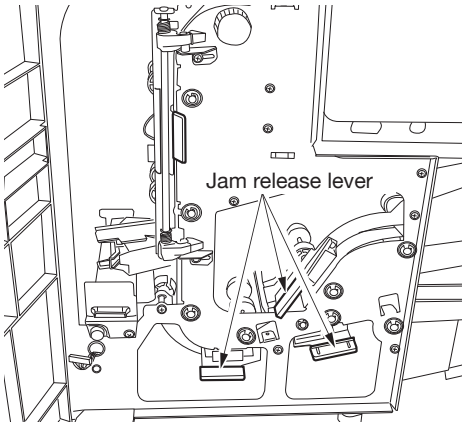

7. Close the front door of the stacker unit.

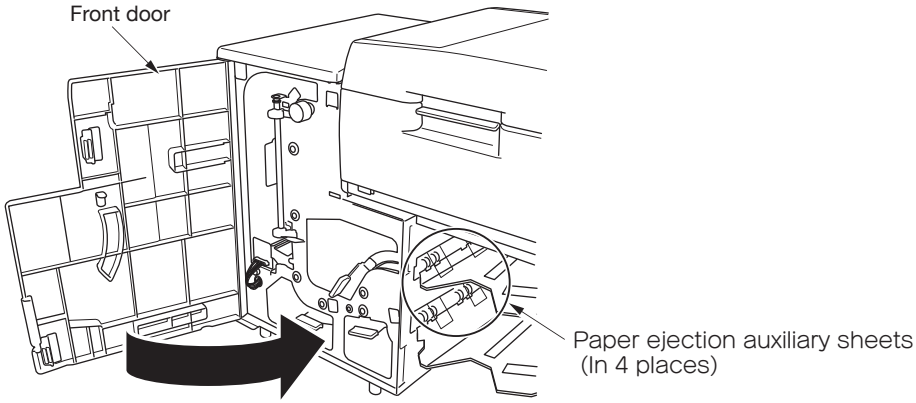

8. Remove any paper dust and scraps that have collected on the paper ejection auxiliary sheets.

Service schedule

For stable operation of this device, regular replacement of components is required.
See the following table, and contact Sekonic, or the dealer where you purchased the device, when requiring component replacement.

Main body unit

Component name	Number	Replacement reference (counter number)	Remarks
Paper-feeding roller	1	1,000,000 or 3 years	-
Double-feeding prevention roller / top	1	1,000,000 or 3 years	Replace at the same time as double-feeding prevention roller / bottom
Double-feeding prevention roller / bottom	1	1,000,000 or 3 years	Replace at the same time as double-feeding prevention roller / top
Driving roller / A	4	1,000,000 or 3 years	-

* Replacement periods may differ depending on usage conditions (usage frequency, quality of paper used, etc.)

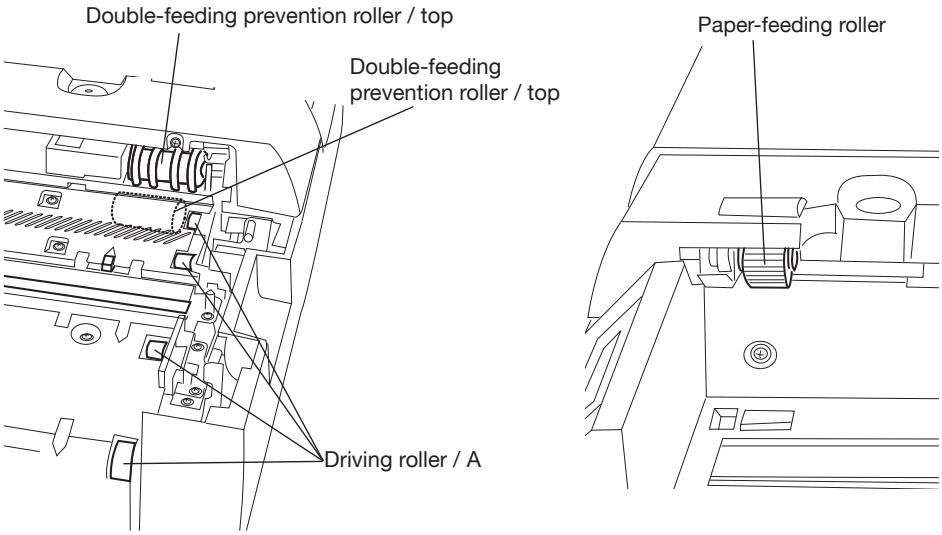

Stacker unit

Component name	Number	Replacement reference (counter number)	Remarks
Driving roller / 1	1	5,000,000 or 3 years	-
Driving roller / 2	2	5,000,000 or 3 years	-
Driving roller / 3	2	5,000,000 or 3 years	-
Driving roller / 4	1	5,000,000 or 3 years	-
Driving roller / 5	1	5,000,000 or 3 years	-
Paper exit roller / 1	2	5,000,000 or 3 years	-
Tension plate/1 Assembly	2	5,000,000 or 3 years	-
Tension plate/2 Assembly	1	5,000,000 or 3 years	-

* Replacement periods may differ depending on usage conditions (usage frequency, quality of paper used, etc.)

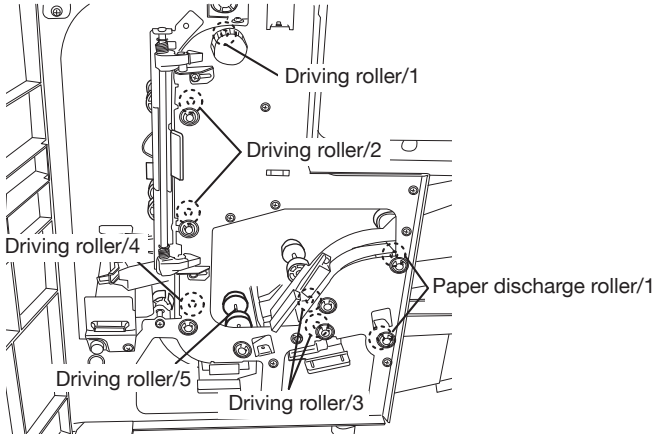

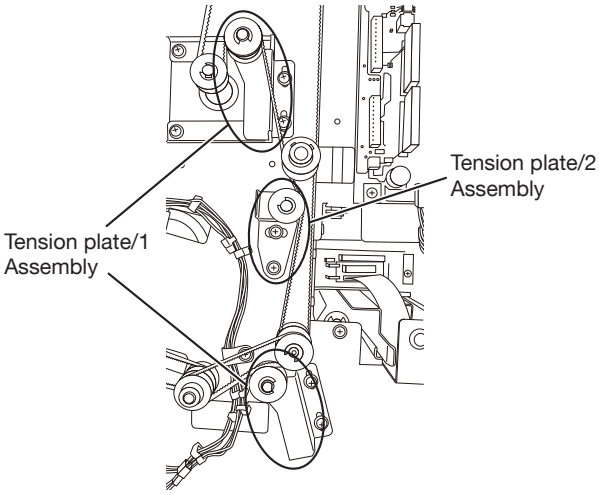

*To place the unit in this state, you will first need to remove the sheet-metal parts and some of the wiring.

Product specifications

Sensor	Reading	Single sided, [double-sided] (* You need an optional back-surface reading unit for double-sided reading.)
	Darkness levels	16 levels (internal 256 levels)
	Light source color	infra red light (940nm) [visible red light (660nm)]
	Pitch (inch)	1/6”, 0.2”, 0.25”, 0.3”, 0.2C”
	Marking	infra red light : pencil [visible red light : pencil, ballpoint pen (black or blue)]
	Reading marks	size: 0.5×3mm or more darkness: PCS 0.6 or darker
Error detection function	Sheet detection(Main body, Stacker) multiple sheet feeding detection, skew detection	
Printing	Equipped in stacker unit	
PC interface	USB 2.0 (Not compatible with USB 1.1)	
Display panel and operating switches	Display panel (LCD)	20 characters x 2 lines
	Operating switches	5
Hopper capacity	500 sheets (paper weight 105g/m^2)	
Paper used	Paper size	IBM card size, postcard size, A5, B5, A4 8.5 inch, 9 inch Height 148.0-355.6mm, width 82.55-228.6mm
	Paper weight	84-157g/m^2
	Paper quality	OCR paper, bond paper, recycled OCR paper (recycled OCR paper composition 50%)
Sheet feeding	Feeding speed	1,240mm/s (1,000mm/s when using the barcode)
Sheet discharge	Stacker volume	Main tray: 500 sheets (when weight 105g/m^2 paper is used) Selection tray: 150 sheets (when weight 105g/m^2 paper is used)
Reverse discharge	Yes	
Power source	AC100-240V, 50Hz/60Hz	
Environmental operating conditions		Temperature 5-35°C Humidity 30-80%
External measurements	800(W) x 490(H) x 365(D) mm	
Weight	37kg (excluding optional items)	
Noise	70dB(A)(when operating)	
	[ ] Inside option	

■ Printer unit specifications

Printing location	Prints on top surface of fed sheet
Printing method	Inkjet
Number of characters printed	SR-11000 mode: 28 characters max. (for A4-size paper) SR-6500 mode: 72 characters max.
Kinds of characters printed	Alphabet (uppercase and lowercase letters) Numbers (0 - 9) 35 Symbols (!"#$%&'()*+,-./:;<=>?@ [¥] ^_ {SP} ～○△□ X)※1 Japanese kana (including half and full accents, 。「」、・ー)
Character size	Height approximately 3mm x width approximately 4.0mm - 6.4mm
Character interval	Approximately 0.8mm - 92mm
Printing pixels	12 vertical x 9 horizontal pixels
Printing position	2mm or more from standard paper feeding edge to beginning of characters (not extened to timing mark) 2mm or more from right edge of maximum size sheet to beginning of characters
Printing position adjustment	Main scanning direction: Adjust head position manually.

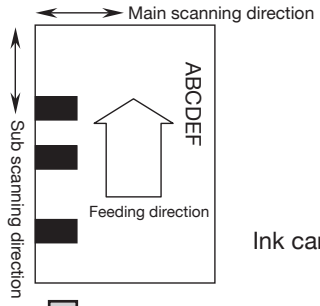

Ink cartridge Expires: 6 months after open the package
Life: about 1 million characters to print※2

The printable area ※3

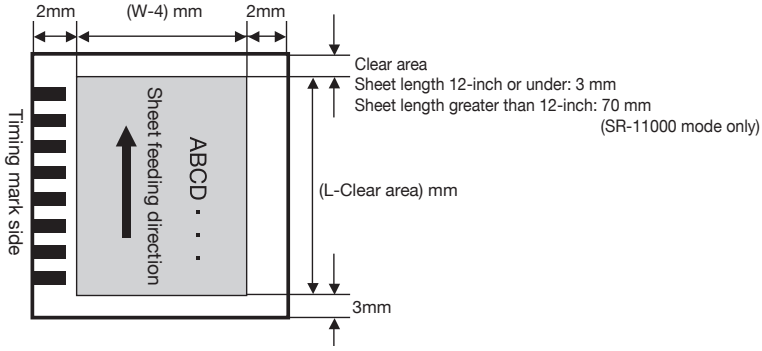

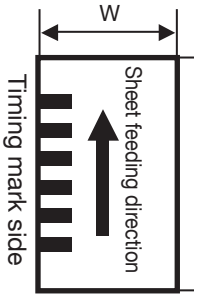

Sheet size

※1:The number of letters until it stops being printed depend on working condition.
※2:The size of printable area depends on the size of the sheet used.

Note)
If a sheet is curled, it may cause a paper jam, so please do not use curled sheet.

■ Barcode unit specifications

Barcode unit / V (Vertical feed)

Reading direction	Vertical feed (Bars on barcodes parallel to the sheet feeding direction)
Applicable codes	JAN/EAN/UPC (Module 0.33 mm, 0.8× to 2×) NW-7 CODE-39 CODE-128(Control codes not applicable) ITF Industrial 2 of 5 COOP 2 of 5 *Note that 4 types of settings can be enabled for reading of several types of codes.
Readable range	Main scanning direction: SR-11000 mode Sheet length 12-inch or under: 10 mm from the front edge of the sheet to 10 mm from the back end of the sheet SR-6500 mode 10 mm from the front edge of the sheet to 10 mm before the back end of the sheet (All sizes) Main scanning direction: Range across ±30 mm centered on 50 mm to 200 mm from the standard edge of the feed paper (on the timing mark side)
No. of digits read	32 digits maximum (Up to 64 digits maximum for CODE-128 if the starting character is CODE-C)
No. of labels read	No. of barcodes read on a single sheet with multiple barcodes SR-11000 mode: 2 max. (1 if the number of digits exceeds 32) SR-6500 mode: 10 max.(The total no. of digits read is to be 350 or under.) *In Total Area Reading mode, multiple instances of the same barcode (the same code, the same data) are read as a single piece of data.
Label interval	30 mm or greater
Barcode size	60 mm or under in length × 10 mm or over in height Coated paper labels are to be used for narrow bar widths from 0.125 mm to 0.19 mm and lengths of 40 mm or under. The total thickness of the location where label is attached must be no more than 0.25 mm. There is to be no label lifting or tearing off. * The length of a barcode is to be at least 2.54 mm, or at least 10× the narrow bar width. There need to be quiet zones (blank margins) to the right and left of whichever is larger.
Barcode density	PCS value: 0.7 or higher (655 nm) *PCS value for a narrow bar width of 0.19 mm or under: 0.85 or higher
Inclination	±5° or less with respect to the standard feed orientation *±2° or less for a narrow bar width of 0.19 mm or less
Reading location	Barcodes are read on the top side of the fed sheet through the device

Reading position adjustment

Sheet width direction: Adjust head position manually
Sheet feeding direction: [Reading Start Position Setting mode]:
Set the reading start position from the edge of the sheet and reading width using the Barcode Quantity Setting command.
[Total Area Reading mode]: Reading can be performed over the entire area of the sheet.
(Reading can be performed on barcodes located in any area along the sheet feeding direction.)
*1. The total thickness of the location where label is attached must be no more than 0.25 mm and there is to be no label lifting or tearing off.

Barcode unit/ H (Horizontal feed)

Reading direction	Horizontal feed (Bars on barcodes run perpendicular to the sheet feeding direction)
Applicable codes	JAN/EAN/UPC (Module: 0.33 mm, 0.8× to 2×) NW-7 ITF CODE-39 CODE-93 CODE-128 (Control codes not applicable) EAN-128 (Control codes not applicable)
Readable range	Main scanning direction: 20 mm to 224 mm centered from the timing mark Sub scanning direction: SR-11000 mode Sheet length 252 mm or under: 12 mm from the front edge of the sheet to 12 mm from the back end of the sheet Sheet length exceeding 252 mm: 12 mm from the front edge of the sheet to 240 mm (12 inches – 65 mm) SR-6500 mode 12 mm from the front edge of the sheet to 65 mm from the back end of the sheet (All sizes)
No. of digits read	48 maximum
No. of labels read	No. of barcodes read on a single sheet with multiple barcodes SR-11000 mode: 2 max. (Up to 48 total digits max.) SR-6500 mode: 10 max. (The total number depends on the size (L) of the sheet; however, the total no. of digits is not to exceed 200.)
Label interval	40 mm or greater (With 2 mm or less of shifting between interval widths in the horizontal direction)
Barcode size	10 mm or greater in height (The total thickness of the location where label is to be attached should be no more than 0.3 mm. There is to be no lifting or peeling of the label.) *There need to be blank margins at least 12 mm wide at the front of the label and at least 4 characters wide at the back.
Inclination	±3° or less with respect to the standard feed direction

Barcode print specifications

- Height: 10 mm or greater
  *There need to be blank margins at least 12 mm wide at the front of the label and at least 4 characters wide at the back.
- PCS value: 0.7 or higher (655 nm)
- Reading bar width (narrow bar): 0.25 mm to 2 mm
  *Bar:space print ratio: 1:0.85 to 1:1.15
  *Recommended N:W ratio: 1:2.5
  *There is to be no blurring, missing parts, voids, or other problems.
- Label attachment position
  *The total thickness of the location where label is to be attached is to be no more than 0.25 mm. There is to be no lifting or peeling of the label.

Reading location: Barcodes are read on the top side of the sheet as it is fed through the device.

Reading position adjustment

Sheet width direction: Adjust the head position manually.
Sheet feeding direction:
[Reading Start Position Setting mode]:
Set the reading start position from the edge of the sheet and the reading width using the Barcode Quantity Setting command (up to 1 max.).
[Total Area Reading mode]:
Reading can be performed over the entire area of the sheet.
(Reading can be performed on any barcodes located in any area along the sheet feeding direction.)

External diagram

(Unit : mm)

Front view

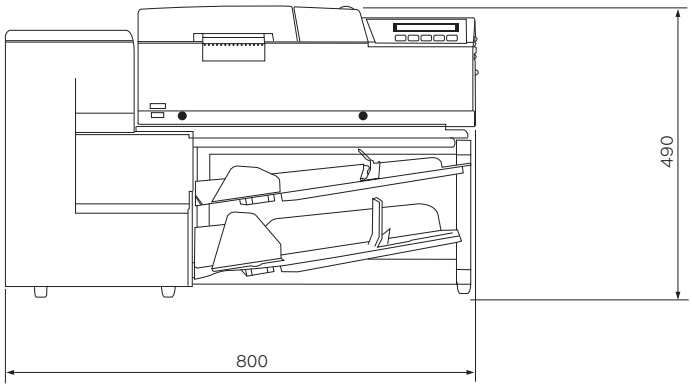

Top view

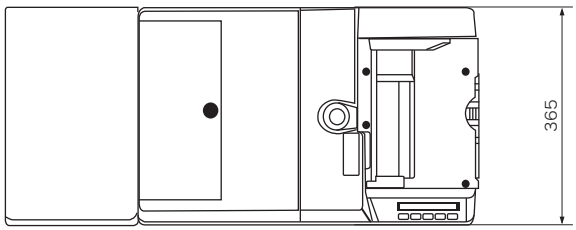

Rear view

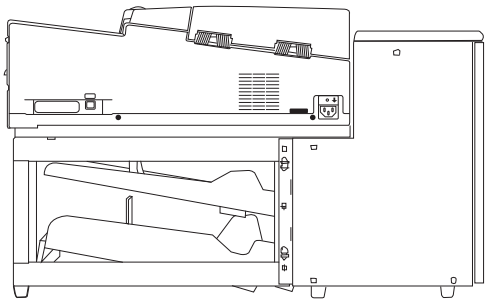

Left view

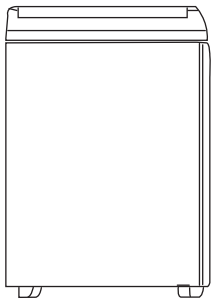

Right view

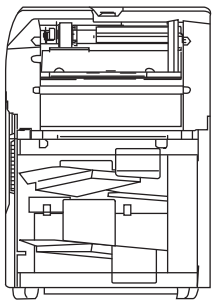

List of menu modes

Setting menu	Setting item	Setting value
Setting of Interface	Device ID	0 - 126
Setting of Reading	Setting of Column	1 - (maximum) Columns *1
	Reading Method	Direct , Control fore , Control back, FACOM, Mark to mark Mark to mark *2
	Magnification (display onlywhen timing control types are selected)	1 - 3 - 9 times (for top-end timing control) 2 - 3 - 9 times (for bottom-end timing control)
	Reading Side (only when back-sided reading unit is installed)	Single Side , Double Side
	Paper Weight	Automatic, 84g/m^2, 105g/m^2, 128g/m^2, 157g/m^2
	Paper Size	Under 12 inch, Over 12 inch
Setting of Error Detection	Automatic Paper Discharge	Yes , No
	Sheet Empty Detection	No , Yes
	Timing Mark Error Detection	Yes , No
	Double-Feeding Detection	Yes , No
	Left End Skew Detection	Yes , No
Setting of Buzzer	Buzzer Control	Valid , Invalid
	Buzzer Sound Adjustment (displayed only when it's valid)	1 - 3 -5
Setting of Printer (only when the printer unit are installed)	Printer Control	Valid , Invalid
	Size	4.0mm - 96.0mm , 0.8Pitch
	Character Pitch	0.8mm - 92.0mm , 0.1Pitch
Setting of Barcord (only when the barcord unit is installed)	Bercord Control	Valid , Invalid
Setting of Electric Power	Time for Power Save	None , 1 Minute - 5 Minutes - 60 Minutes
	Time for Standby	None , 1 Minute - 5 Minutes - 60 Minutes

*1 Maximum number of columns to read differs depending on device sensor pitch.
*2 Factory default values differs depending on device sensor pitch.
1/6 inch:Direct under type 0.2,0.25,0.3,0.2C inch:Top-end timing control type

☐ indicates factory default values.

Setting menu	Setting item		Setting value
Display Mode *	Display Info	Main Body Unit	(01 - zz) *3
		Front Reading Unit	(01 - zz) *3
		Back Reading Unit (only when back-sided reading unit is installed)	(01 - zz) *3
		StackerUnit	(01 - zz) *3
		Barcode Unit (only when the barcode unit is installed)	(01 - zz) *3
	Type of front Reading Sensor	Sensor Pitch	(1/6 , 0.2 , 0.25 , 0.3 , 0.2C inch) *3
		Sensor of Type	(Infra Red , Visible Red) *3
	Type of Back Reading Sensor (Displayd only for back-side unit)	Sensor Pitch	(1/6 , 0.2 , 0.25 , 0.3 , 0.2C inch) *3
		Sensor of Type	(Infra Red , Visible Red) *3
	Type of Option	Reading Sensor Unit	(Single Side , Double Side) *3
		Printer Unit (only when the printer unit is installed)	(Not Cartridge , Cartridge) *3
		Barcode Unit (only when the barcord unit is installed)	(Not Unit , Vertical , Horizontal) *3
	Total count		(00000000 - 99999999)
	Serial number		(000000000 - zzzzzzzzz)
Test Mode	Feed Test 1		Start , Stop
	Feed Test 2		Start , Stop
	Marking Test		Start , Stop
	Printer jet test		Start

*3 Data in parenthesis will appear according to options installed in the device.

☐ indicates factory default values.

Error displays and countermeasures

1. Errors

If an error occurs, complete the relevant procedures listed below to resolve and clear the cause of the error. If unable to clear the error using the procedures given, contact your dealer for assistance.

(1) Hardware errors

[Main body unit]

Error	Explanation	Code	Procedures for Resolving and Clearing Errors
Memory error 1	Internal memory error 1	A1	Cannot be resolved*1
Memory error 2	Internal memory error 2	A2	
Hopper drive error	Hopper operating error	A3	
Download error	Error while downloading to the main body	A4	
Sensor type error	· Sensor specifications for front surface/back surface reading unit are wrong · Sensor specifications for front surface/back surface reading unit are wrong	A5	
Optional error	Optional unit detection error	A6	
Power supply voltage error	A irregularity is detected in power supply supervisory voltage of control board	A8	

[Reading unit]

Error	Explanation	Code	Procedures for Resolving and Clearing Errors
Communication error	Line error occurred between the device and the front side reading unit.	B1	Cannot be resolved*1
	Line error occurred between the device and the back side reading unit.		
Internal com. error	Front side reading unit doesn't reply	B2	
	Back side reading unit doesn't reply		
Memory error	Front side reading unit memory error	B3	
	Back side reading unit memory error		
Adjusted value error	Offset value of front side reading sensor exceeds acceptable level.	B4	
	Offset value of back side reading sensor exceeds acceptable level.		
Download error	Front side reading unit download error	B5	
	Back side reading unit download error		

[Reading unit]

Error	Explanation	Code	Procedures for Resolving and Clearing Errors
Internal error	Front side reading unit internal error	B6	Cannot be resolved*1
	Back side reading unit internal error		
Version error	Front side reading unit version does not correspond to the main body unit.	B7	
	Back side reading unit version does not correspond to the main body unit.		
	Front and back side reading unit versions do not match.		

[Barcode unit]

Error	Explanation	Code	Procedures for Resolving and Clearing Errors
Communication error	Line error occurred between the device and the barcode unit.	C1	Cannot be resolved*1
Internal com. error	Barcode unit doesn't reply.	C2	
Memory error	Barcode unit memory error.	C3	
Sensor error	Error occurred with barcode sensor.	C4	
Download error	Barcode unit download error.	C5	
Internal error	Barcode unit internal error.	C6	
Version error	Barcode unit version does not correspond to the main body unit.	C7	

[Stacker unit]

Error	Explanation	Code	Procedures for Resolving and Clearing Errors
Communication error	Line error occurred between the device and the stacker unit.	E1	Cannot be resolved*1
Internal com. error	Stacker unit doesn't reply.	E2	
Memory error	Stacker unit memory error.	E3	
Download error	Stacker unit download error.	E4	
Internal error	Stacker unit internal error.	E5	
Version error	Stacker unit version does not correspond to the main body unit.	E6	
Driver error	A driver error occurred in the drive system of the stacker unit.	E7	

***1 Errors that cannot be resolved**
Turn the power off and turn it back on after a while. If the error cannot be resolved by turning the power off and on, contact the dealer where you bought.

(2) Transmission errors

Error	Explanation	Code	Procedures for Resolving and Clearing Errors
Command error	A non-specified command code was received.	F5	• Press the (CLEAR) switch (or execute the clear error command). • Check to make sure that the USB cable is connected properly. • Check the details of the host application program. • Resolve) Check the details of the controller for the relevant application.
Parameter error	A non-specified parameter was received.	F6	
Protocol error	While processing a command, another command was received.	F7	

(3) Cover open errors

Error	Explanation	Code	Procedures for Resolving and Clearing Errors
Cover open	The cover of the main body unit is open	G1	Make sure to firmly and securely close the top cover on the device.
Stacker unit cover open	Front door of the stacker unit is open.	G2	Make sure that the front door on the stacker unit is firmly and securely closed.

* When the cover is closed, errors and warnings other than hardware errors will be cancelled.

(4) Jam errors
[Main body unit]

Error	Explanation	Code	Procedures for Resolving and Clearing Errors
No feed	Paper is not feeding though paper-feeding operation has started.	H1	• Reset paper. • Press the (CLEAR) switch (or execute the clear error command). • Resolve) Clean the rollers.
Jam at paper-feeding detection sensor	A paper jam occurred at the paper-feeding detection sensor.	H2	• Remove any sheets that have become jammed or sheets inside the device. • Press the (CLEAR) switch (or execute the clear error command). • Resolve) Clean the rollers. • Check to make sure there are no foreign objects within the machine and remove as necessary
Jam at reading start detection sensor	A paper jam occurred at the reading start detection sensor.	H3	
Jam at main body unit paper discharge detection sensor	A paper jam occurred at the main body unit paper discharge detection sensor.	H4	
Device sheet interval error	The sheet interval is below the set interval.	H5	

[Stacker unit]

Error	Explanation	Code	Procedures for Resolving and Clearing Errors
Jam at printing start detection sensor	A paper jam occurred at the printing start detection sensor.	I1	• Remove any sheets that have become jammed or sheets inside the device. • Press the (CLEAR) switch (or execute the clear error command). • Check to make sure there are no foreign objects within the machine and remove as necessary
Jam at main paper discharge sensor	A paper jam occurred at the main paper discharge sensor.	I2	
Jam at selected paper discharge sensor	A paper jam occurred at the selected paper discharge sensor.	I3	
Paper jam in the top paper feed route	A paper jam occurred in the top paper feed route.	I4	
Paper jam in the bottom paper feed route	A paper jam occurred in the bottom paper feed route.	I5	
Stacker sheet interval error	The sheet interval is too low .	I6	

2. Warnings

(1) Components

Error	Explanation	Code	Procedures for Resolving and Clearing Errors
Back side reading unit unconnected	Back surface reading unit is not installed.	P1	• Check if the back side reading unit is installed. • Press the (CLEAR) switch (or execute the clear error command).
Barcode unit not connected	The barcode unit is notconnected to the device.	P2	• Check to see if the barcode unit is connected to the unit. • Press the (CLEAR) switch (or execute the clear error command).
Printer unit unconnected	• Printer unit is not installed. • Printer cartridge is not installed.	P3	• Press the (CLEAR) switch (or execute the clear error command). • Set printer control invalid.
Stacker unit unconnected	Stacker unit is not connected.	P4	• Check if the Stacker unit is connected. • Press the (CLEAR) switch (or execute the clear error command).

(2) Paper feeding

Error	Explanation	Code	Procedures for Resolving and Clearing Errors
Sheet empty	There is no paper in the hopper or the internal units.	Q1	• Press the (CLEAR) switch (or execute the clear error command). • Place paper back on the hopper.
Double feed error	Two or more sheets were fed simultaneously.	Q2	• Press the (CLEAR) switch (or execute the clear error command). • Separate the sheets to loosen them before placing them on the hopper to prevent jams. • Check the setting for the paper weight dial.
Left end skew error	Paper was fed crocked.	Q3	• Press the (CLEAR) switch (or execute the clear error command). • Check the position of the paper guide and make sure that positioned so as to ensure that the sheets are be lined up properly.

(3) Operation errors

Error	Explanation	Code	Procedures for Resolving and Clearing Errors
Hopper stops	Interlock on the side of the paper-feeding roller operated.	R1	• Release the interlock switch. • Press the (CLEAR) switch (or execute the clear error command).
Drawing out error	Sheet was pulled out after it was fed.	R2	• Place paper back on the stacker. • Press the (CLEAR) switch (or execute the clear error command).
Timing mark error	Only three or fewer timing marks were detected on the front side of the read sheet.	R4	• Check the orientation of the sheets. • Check the specifications of the paper. • Press the (CLEAR) switch (or execute the clear error command).
	Only three or fewer timing marks were detected on the back side of the read sheet.		
Setting error	When reading front side marks using a timing control type, the next timing mark is detected within the area set by the control multiple number.	R5	• Set a reading type and a control multiple number according to paper specifications. • Check the specifications of the paper. • Press the (CLEAR) switch (or execute the clear error command).
	When reading back side marks using a timing control type, the next timing mark is detected within the area set by the control multiple number.		
USB connection error	An error occurred in the USB connection.	R7	• Turn off the device and reconnect the USB cable. • Then turn on the device.
Sheet size setting error	A sheet with dimensions outside of the set range was fed into the device.	R8	• Remove any sheets from inside the device. • Press the [CLEAR] switch (or execute the error reset command). • Configure the sheet size settings to match the dimensions of the sheet being read by the device.
Sheet layout error	The next sheet was detected before the barcode on the previous sheet finished being read due to the barcode being located within the clear area for the rear edge on a sheet fed horizontally. *On SR-11000 models only.	R9	• Use with sheets positioned within the reading area for barcodes on sheets fed horizontally. • Press the (CLEAR) switch (or execute the clear error command).
Black level error	There is light colored stain on the front side reading unit.	S2	• Check the reader unit for dirt and other contamination and clean as necessary. • Press the (CLEAR) switch (or execute the clear error command).
	There is light colored stain on the back side reading unit.		
Reading start detection sensor soiling error	There is stain on reading start detection sensor.	S3	• After cleaning off the sensor, turn the power back on.

[Main body unit]

Error	Explanation	Code	Procedures for Resolving and Clearing Errors
Form left in hopper	A sheet remained in the paper feeding detection sensor.	T1	• Remove leftover sheets of paper from the device. • Press the (CLEAR) switch (or execute the clear error command).
Form left in reading sensor	A sheet remained in the reading start detection sensor.	T2	
Form left in end of main body	A sheet remained in the main body unit paper discharge detection sensor.	T3	

[Stacker unit]

Error	Explanation	Code	Procedures for Resolving and Clearing Errors
Form left in printer printing sensor	A sheet remained in the printer printing start detection sensor.	T4	• Remove leftover sheets of paper from the device. • Press the (CLEAR) switch (or execute the clear error command).
Form left in main paper discharge sensor	A sheet remained in the main paper discharge sensor.	T5	
Form left in selected paper discharge sensor	A sheet remained in the selected paper discharge sensor.	T6	

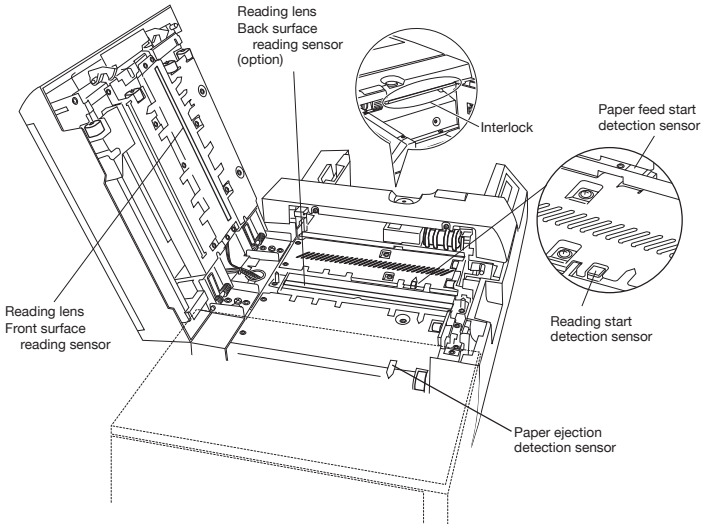

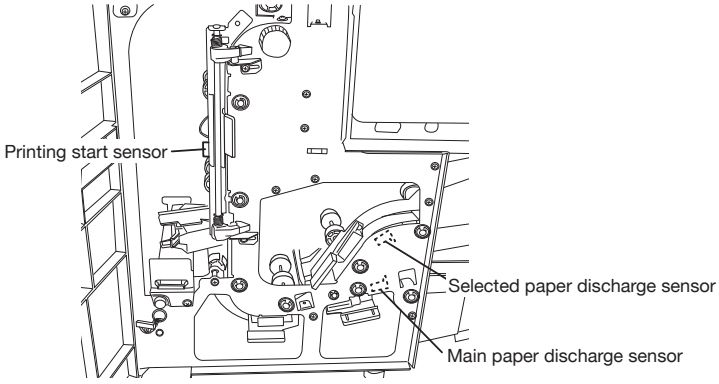

OMR glossary

Optical Answer (OMR Sheets)

Form

(1) OCR paper (optical character recognition paper)
Paper for data processing to optically read letters and symbols. It should not be dusty, and it should be smooth, stiff, abrasion resistant, and antistatic.
JIS X 9004 (printing specifications for optical character recognition)

(2) Bond paper
Paper made from pure chemical pulp. Used for printing and writing.
JIS P 3101 (printing paper) JIS P 3201 (writing paper)

(3) Paper weight
Paper is categorized by weight.

Column and Row

Marking frames are placed in rows, and timing marks in columns. A paper jam error occurs when paper gets jammed while being fed into the device.
There are two types of paper jams, static jams detected while the device is at rest and operational jams detected while the device is running.
Operational jams may be caused by double-feeding, no-feeding, and similar issues.

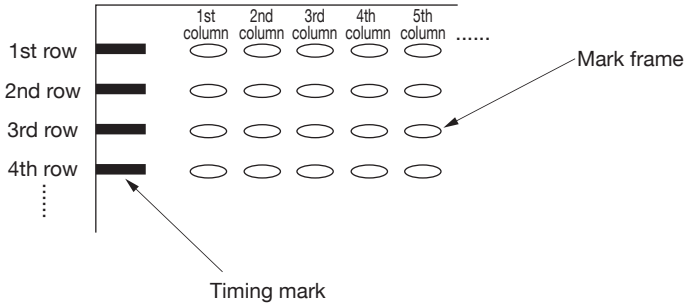

Dropout color

Refers to colors pre-printed or written on documents that people can see but that don't appear when read with an image scanner or other devices.
There are "warm colors" and "cold colors" by appearance. Warm colors called orange end, red end, etc. are used as OCR dropout colors, and you need to switch filters in this device for bluish dropout color sheets such as the standard forms used by the Japan Chain Stores Association. Bluish colored lines drop out when they are scanned with copy machines and other devices even if they don't use dropout color ink. OCR paper for fax machines uses "cold color (blue-green)" dropout colors, but there are only a few colors that can be used with most fax machines, because they are different from OCR units.

(1) Dropout color print darkness is controlled by the PCS value. There are two ways to measure PCS, black backing and white backing, and you should pay attention because they differ depending on the model.

(2) OCR sheets are generally used for printing character boxes using dropout color inks and printing letters in clear areas.
(3) Recently, some models have become available that are capable of reading black character boxes, but dropout color printing sheets are often superior in both recognition performance and processing speed.
(4) Dropout colors are chosen by spectral characteristics and PCS values that are determined by scanner sensor, light source, and filter.

(5) Colors that can be used as dropout colors differ depending on the model, but with some models, even regular ballpoint pen ink drops out and cannot be used. In such cases, you need special OCR ballpoint pens that are rarely available today. See table below for relationships between wavelengths and colors.

Peak sensitivity wavelength	Color	Remarks
740(nm)	Sepia Magenta Purple Brown	Abundant dropout colors Some ballpoint pens cannot be used.
	Bluish tones Greenish tones	
660	Rose Pink Red Orange	For red end colors only, rose aniline, purplish red, deep red Regular ballpoint pens can be used.
570	Yellow	As in fax scanners, it's difficult to see with human eyes should be avoided. Regular ballpoint pens can be used.
530	Blue	Regular ballpoint pens can be used for blue-end colors only. Green
	Green	

a) It is important to control the PCS value to print dropout colors. (You need to choose a printer equipped with devices that can measure PCS values.)
b) If you want to use an abundance of colors, we recommend printing in ink other than dropout colors as a "black frame sheet."

PCS (printed contrast signal)

Refers to the reflectance ratio (contrast) of printed marks, symbols, and letters as opposed to reflectance of non-printed areas. The calculation formula is as follows.

$$\text{PCS} = \frac{\text{White reflectance - black reflectance}}{\text{White reflectance}}$$

When reflectance of areas with no printing is 70%, and reflectance of printed marks, symbols, and letters is 10%, the PCS will be 0.857.

Direct under type

If paper has pre-printed timing marks, the scanning area (reading area) of targeted mark frames will be determined by such timing marks.
Direct under type refers to a method of reading a zone that is the same as the timing mark width.
Other methods include timing control type, mark to mark type, and FACOM type.

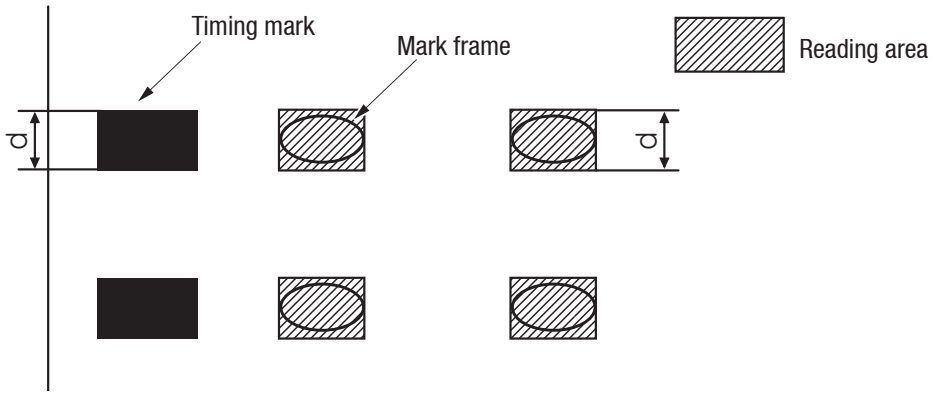

Timing control type

If paper has pre-printed timing marks, the scanning area (reading area) of targeted mark frames will be determined by such timing marks.
Timing control type is a method to determine the reading zone based on the timing mark width. Other methods include direct under type, mark to mark type, and FACOM type.
Example: Timing control type to scan three times the timing mark width.
Set multiple numbers using the software controlling OMR.

• Top-end timing control type:

Reads n times the width of a timing mark from the beginning of the timing mark.

• Bottom-end timing control type:

Reads n times the width of a timing mark from the end of the timing mark.

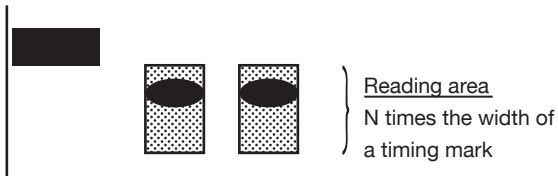

"FACOM" type

If paper has pre-printed timing marks, the scanning area (reading area) of targeted mark frames will be determined by such timing marks.

FACOM type refers to a method of determining the reading zone based on a pair of start timing and stop timing marks. Other methods include timing control type, direct under type, and mark to mark type.

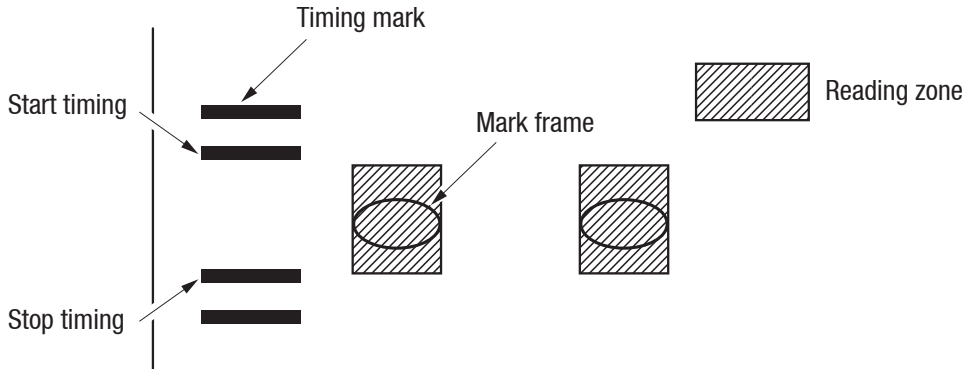

Mark to mark type

If paper has pre-printed timing marks, the scanning area (reading area) of targeted mark frames will be determined by such timing marks.
Mark to mark type is a method to read zones between two timing marks. Therefore, the number of timing marks in mark to mark type forms is always an even number. Other methods include timing control type, direct under type, and FACOM type.

• Mark to mark type
(without top–end margin reading):

The reading zone is the area between timing marks.

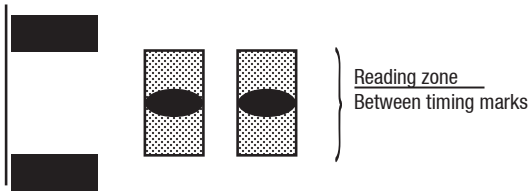

• Mark to mark type
(with top–end margin reading):

The reading zones are the front margin of the form as the first row, and between timing marks as the second and subsequent rows.

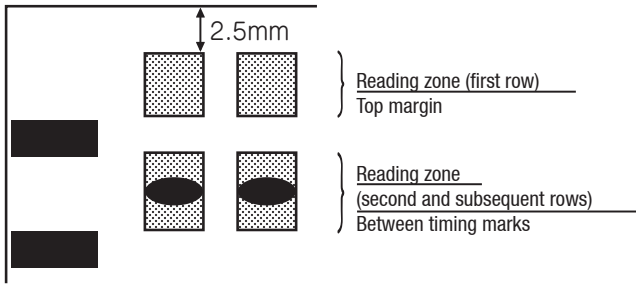

Errors

Jam

A paper jam error caused by media when paper is being fed.
There are two kinds of jams: static jams detected when the device is at rest, and operational jams detected while the device is running.
Operational jams include double-feeding jams and no-feeding jams.

Skew

Refers to paper that is slanted against the paper feeding standard.
This function detects whether or not paper is fed straight.
Perforated paper, paper unevenly cut, and curled or bent paper is likely cause skew errors.

No feed

Refers to paper doesn't get fed during paper feeding operations.
If such an error occurs, the device assesses it as a paper feeding error, and notifies user of the error.

Double-feeding

Refers to two or more sheets being fed at the same time during paper feeding operation. If such an error occurs, the device assesses it as a paper feeding error, and notifies users of the error.

Equipment

Sensor (for reading) Reading sensor/position sensor

Sensors are photoelectrical elements that transform reflected light. Sometimes sensing refers to both light emission and light reception.
LED wavelength influences dropout color. We use mainly two wavelengths, and the relationships between wavelength, dropout colors, and readable colors are shown in the table below.

Wavelength	Color	Dropout color	Readable color
940nm	Infra red	Colors other than readable colors	Black and blue pigments
660nm	Visible light (red)	Red, orange, pink	Black, blue

Hopper

A place to put sheets to be processed for marking and compilation.

Stacker

This refers to the place that sheets that have been read are temporarily stacked. Stacker volume refers to the number of sheets that can be accommodated. Example: stacker volume 200 sheets.

Transmission interface

A hardware device that works as an interface connecting together a computer and an OMR.
This product uses an interface with USB 2.0.

Writing implements

Readable marks and unreadable marks depend on the writing instruments used. This can also differ according to the light source that the reading sensor uses.

Relationships between sensors used for OMR (light source) and writing implements

Readable mark colors and writing implement	Light source wavelength	Color tone
Color: black (pigment) Writing implement: pencil	940nm (standard)	Infra red
Color: black, brown, blue, green, purple Writing implement:pencil, fountain pen, water/oil base ballpoint pen, water/oil base marker	660nm (*Option)	Visible light (red)

Appendix

■ Sheet creation reference

You can use paper that you make yourself with this device in addition to the optional paper that we offer. If you make your own paper, follow the specifications below.

(1) Sheet size
Height 148.0-355.6mm Width 82.55-228.6mm
Do not cut or round the corners on the reference side (timing mark side). (See P.iv)

* Cut corners and round corners
They help you to easily check if paper is placed in the right direction, and help you to manage paper and keep it orderly.
Cut paper corners straight or rounded according to the specifications shown below.

Straight cut corners: standard 6mm or less.
Chamfer angle 45°

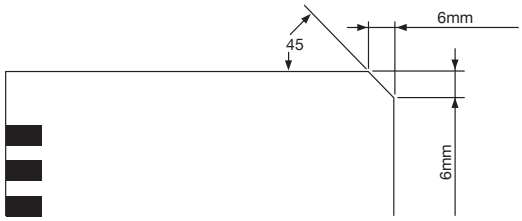

Round corners: R 6mm

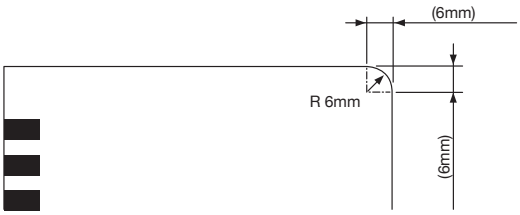

(2) Weight and thickness

g/m2 (grams per sheet)	84 - 157
mm (thickness)	0.1 - 0.19

(3) Paper quality
OCR paper, quality paper, or recycled OCR paper.

(4) Printing ink (printing surrounding mark fields)

① Near-infrared sensor (for pencil marks)

i. Printing of marking frames and dotted lines: Print using ink with a PCS value of 0.15 or lower.

ii. Printing of timing marks: Print using ink with a PCS value of 0.85 or higher.

*PCS values are measured at a spectral band of B900 with a read sensor with a wavelength of 940 nm.

② Visible light sensor (for pencil or ball-point pen marks)

i. Printing of marking frames and dotted lines: Print using ink with a PCS value of 0.15 or lower.

ii. Printing of timing marks: Print using ink with a PCS value of 0.85 or higher.

*PCS values are measured at a spectral band of B900 with a read sensor with a wavelength of 660 nm.

(5) Printing position accuracy

Parallelism	Adjust printing parallelism for timing marks and data marks 0.2mm or less based on the cutting edge of the timing mark side.
Perpendicularity	Adjust printing perpendicularity for timing marks and data marks 0.2mm or less based on the cutting edge of the timing mark side.
Other	Adjust to ±0.2mm or less of specified measurements unless otherwise specified.

(6) Prohibited printing zones

Do not print between timing marks, or between the top-end (bottom-end) timing mark and the top edge (bottom edge) of the mark sheet.

Top-end margin*:	9mm or more from the top edge to the first timing mark.
Bottom-end margin:	9mm or more from the last timing mark to the bottom edge.
Side margin:	4mm or more on the opposite side of the sheet's standard edge. *For IBM card size, top end margin is 5mm or more, bottom- end margin is 6mm or more

(7) Direction of paper grain

Feed paper in the direction of its grain to eliminate curling.

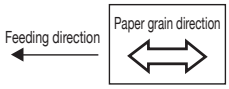

(8) Clear zones

Do not print in colors other than dropout colors 0.8mm around reading zones and 0.8mm from timing mark longitudinal ends.

Reading zone:

The vertical direction of the data mark standard position is the height set by command, and the horizontal width refers to the area of the data mark frame width.

Dropout colors:

Dropout colors refers to colors that are already printed or written on a document that can be seen by human eyes but cannot be recognized by a reading sensor.

(9) Black ink printing

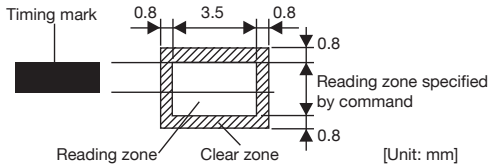

Descriptions, etc. can be printed in areas except print prohibition zones and clear zones. However, never print anything at PCS 0.15 or more other than timing marks in timing mark columns from the top edge of sheet to the bottom edge on either side of the paper.

(10) Printing on back surface
You can print on the back surface except in print prohibition zones. However, do not print at PCS exceeding 0.15 in clear zones on the front surface in case of bleeding through from the back.

(11) ID mark
Set an ID mark for identification as necessary.

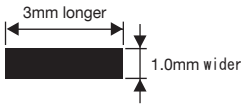

Size: 1.0mm or wider x 3mm or longer.
Reading darkness: PCS 0.8 or higher
Angle: ±5 degree or less (against the line perpendicular to the standard side)

(12) Mark frame
Rectangles, ovals, and circle shapes have been conventionally used for mark frames.
Frame size should be smaller than the reading zone in various reading methods (direct under type, timing control type, mark to mark type, and FACOM type).
Recommended sizes are as follows.
Rectangles: Vertical 0.8-1.5mm Horizontal 3-3.5mm
Ovals: Vertical 1.5-2.5mm Horizontal 3-4.3mm
Circles: O 3.0-3.5mm
*Maximum horizontal length differs depending on sensor pitch.
Adjust horizontal length = (sensor pitch - 0.7mm) or less.

P(inch)	1/6”	0.2”	0.25”	0.3”
Sensor pitch(mm)	3.53	4.38	5.65	6.92

*Printing color: print at PCS 0.15 or less in dropout color.

(13) Required number of timing marks
An error will occur unless at least four timing marks are printed.
(On both sides for two-sided printing.)

(14) Paper dimensions
[Direct under type sheet]

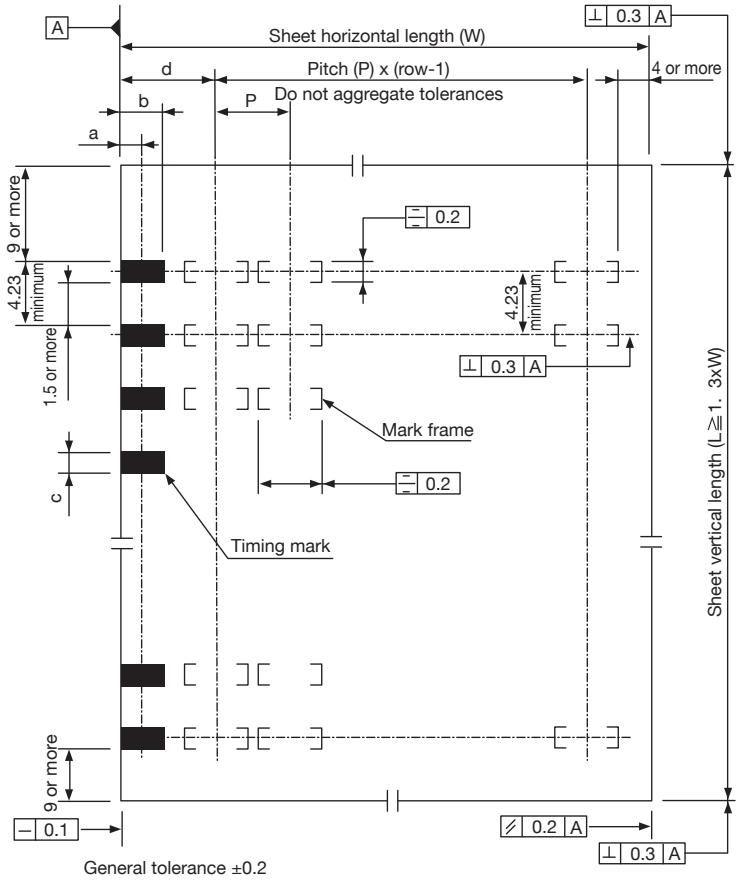

	1/6	0.2	0.25	0.3
P (in.)	1/6”	0.2”	0.25”	0.3”
(Converted to mm)	4.23	5.08	6.35	7.62
a	6.99	1.91	1.78	2.50
b	3.81	3.81	3.56	5.00
c	1.27	1.27	1.27	1.27
d	11.43	11.75	6.35	14.50

	0.2C
P (in.)	0.2”
(Converted to mm)	5.08
a	5.08
b	5.08
c	2.2
d	13.97

Size	W×L (mm)	Maximum number of columns				Maximum number of rows
		1/6	0.2	0.25	0.3	
IBM*	82.55×187.3	16	13	12	9	40
Postcard	100×148	20	17	14	11	31
A5	148×210	31	26	22	17	46
B5	182×257	39	33	27	22	57
A4	210×297	46	38	32	25	66
8.5"	216×279	47	40	33	26	62
9"	228.6×355.6	48	40	33	27	80

Note 1) Maximum number of rows indicates the number of timing marks.
Note 2) Printing specifications for IBM card size are described on the next page.

[Direct under type card (0.25” IBM card size)]

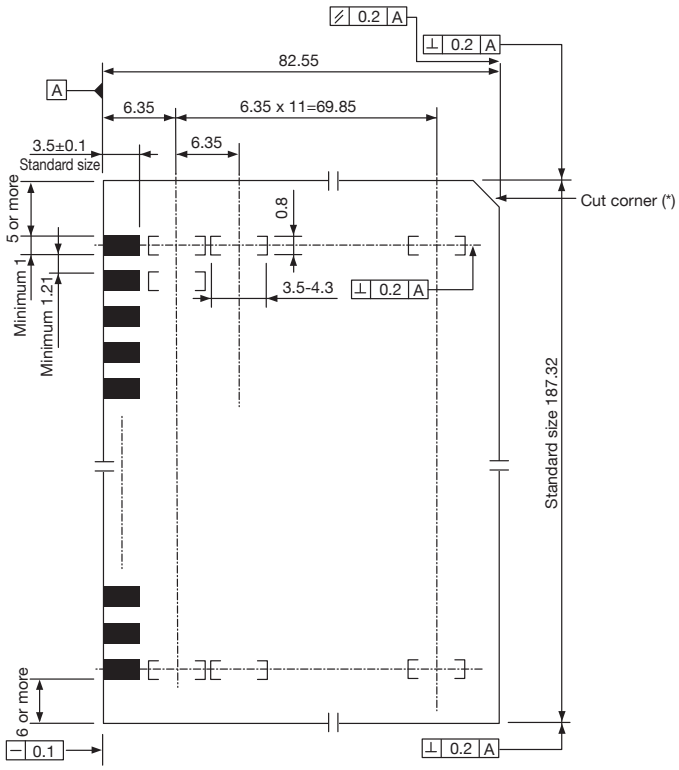

General tolerance ±0.2 [Unit: mm]

[Timing control type sheet]

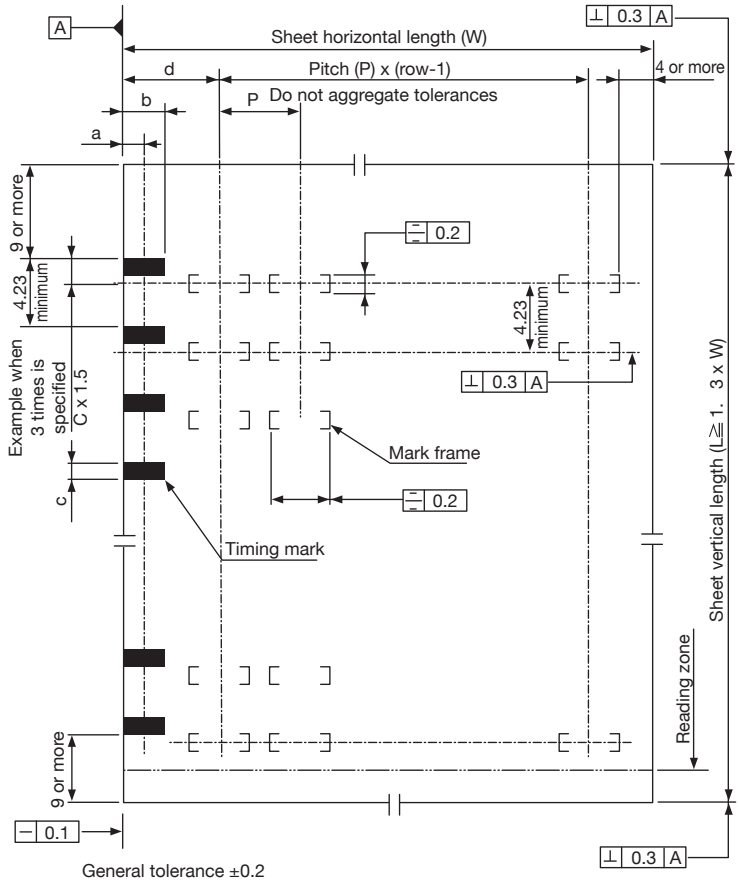

[Unit: mm]

	1/6	0.2	0.25	0.3
P (in.)	1/6”	0.2”	0.25”	0.3”
(Converted to mm)	4.23	5.08	6.35	7.62
a	6.99	1.91	1.78	2.50
b	3.81	3.81	3.56	5.00
c	0.89	0.89	0.89	0.89
d	11.43	11.75	6.35	14.50

	0.2C
P (in.)	0.2”
(Converted to mm)	5.08
a	5.08
b	5.08
c	0.89
d	13.97

Size	W×L (mm)	Maximum number of columns				Maximum number of rows
		1/6	0.2	0.25	0.3	
IBM*	82.55×187.3	16	13	12	9	40
Postcard	100×148	20	17	14	11	31
A5	148×210	31	26	22	17	46
B5	182×257	39	33	27	22	57
A4	210×297	46	38	32	25	66
8.5"	216×279	47	40	33	26	62
9"	228.6×355.6	48	40	33	27	80

Note 1) Maximum number of rows indicates the number of timing marks.
Note 2) Set magnification values in order for the gap to be possible 1.4 mm or more from the top-end of next timing mark.

[Mark to mark type sheet]

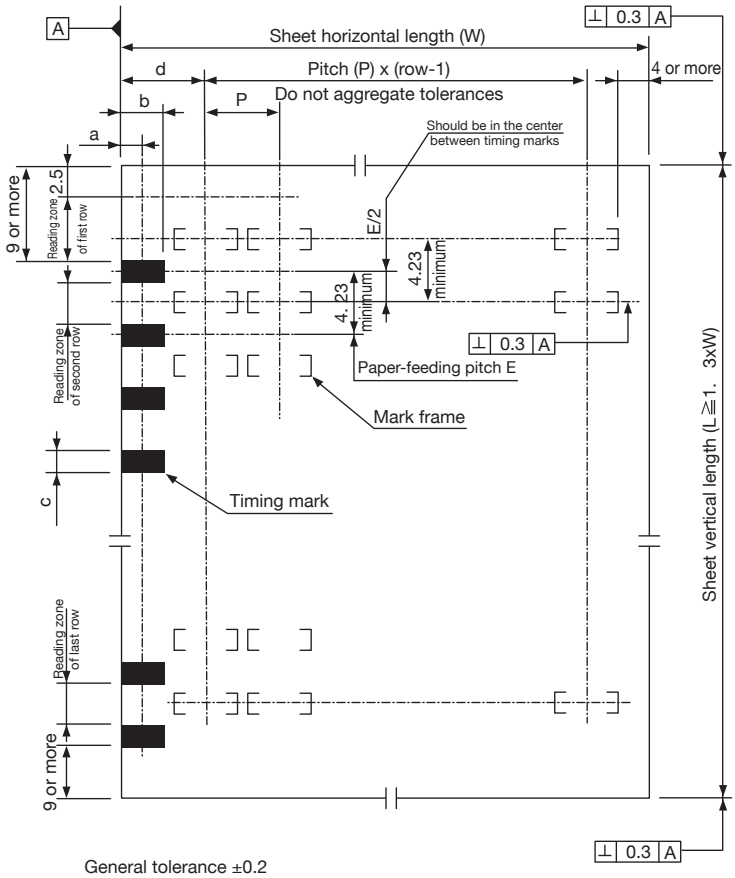

General tolerance ±0.2

[Unit: mm]

	1/6	0.2	0.25	0.3
P (in.)	1/6”	0.2”	0.25”	0.3”
(Converted to mm)	4.23	5.08	6.35	7.62
a	6.99	1.91	1.78	2.50
b	3.81	3.81	3.56	5.00
c	1.50	1.50	1.50	1.50
d	11.43	11.75	6.35	14.50

	0.2C
P (in.)	0.2”
(Converted to mm)	5.08
a	5.08
b	5.08
c	1.50
d	13.97

Size	W×L (mm)	Maximum number of columns				Maximum number of rows
		1/6	0.2	0.25	0.3	
IBM*	82.55×187.3	16	13	12	9	40
Postcard	100×148	20	17	14	11	31
A5	148×210	31	26	22	17	46
B5	182×257	39	33	27	22	57
A4	210×297	46	38	32	25	66
8.5"	216×279	47	40	33	26	62
9"	228.6×355.6	48	40	33	27	80

Note 1) Maximum number of rows indicates the number of timing marks.
Note 2) Printing specifications for IBM card size are described on the next page.

[Mark to mark type card (0.25” IBM card size)]

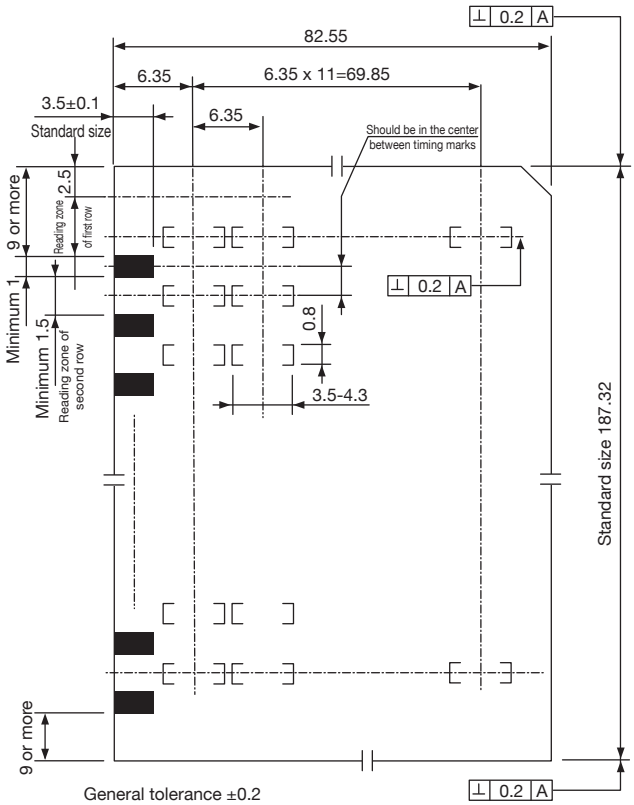

[Unit: mm]